TOWN OF WEDDINGTON
REGULAR TOWN COUNCIL MEETING
MONDAY, JULY 10, 2017 – 7:00 P.M.
WEDDINGTON TOWN HALL
1924 WEDDINGTON ROAD
WEDDINGTON, NC 28104

AGENDA

Prayer – Mayor Bill Deter

1. Open the Meeting

2. Pledge of Allegiance

3. Determination of Quorum

4. Public Comments

5. Additions, Deletions and/or Adoption of the Agenda

6. Consent Agenda
   A. Authorize the Tax Collector to Collect the 2017 Real Property Taxes for the Town of Weddington
   B. Authorize the Tax Collector to charge off 2006 Property Taxes

7. Approval of Minutes
   A. June 12, 2017 Regular Town Council Meeting Minutes

8. Old Business
   A. Discussion and Consideration of Calling for a Public Hearing to be held August 14, 2017 at 7:00 p.m. at the Weddington Town Hall to consider a Text Amendment to Section 22-1 titled Excessive Noise Prohibited; Exemptions; And, Section 58-19 titled Noise
   B. Discussion of a Public Nuisance Text Amendment
   C. Discussion of Town Survey

9. New Business
   A. Discussion and Consideration of Calling for a Public Hearing to be held August 14, 2017 at 7:00 p.m. at the Weddington Town Hall to consider a text amendment to Section 58-58(4)(e)(1) – Minimum Lot Size
   B. Discussion and Consideration of the Graham Allen Subdivision Preliminary Plat/Construction Plans
   C. Land Use Plan Annual Review
   D. Discussion of Boy Scout Eagle Project ideas

E. Discussion and Consideration of a new code enforcement contract with Centralina Council of Governments.

10. Update from Planner

11. Code Enforcement Report

12. Update from Finance Officer and Tax Collector

13. Public Safety Report

14. Transportation Report

15. Council Comments

16. Adjournment

TO: Mayor and Town Council

FROM: Kim H. Woods, Tax Collector

DATE: **July 10, 2017**

SUBJECT: **2017 Real Property Taxes**

In accordance with General Statutes 105.321, I am hereby requesting authorization to collect the 2017 Real Property Taxes for the Town of Weddington.

State of North Carolina
Town of Weddington

To the Tax Collector of the Town of Weddington

You are hereby authorized, empowered, and commanded to collect the taxes set forth in the tax records filed in the Town of Weddington Collections Department and in the tax receipts herewith delivered to you, in the amounts and from the taxpayers likewise therein set forth. Such taxes are hereby declared to be a first lien upon all real property of the respective taxpayers in the Town of Weddington, and this order shall be a full and sufficient authority to direct, require, and enable you to levy on and sell any real or personal property of such taxpayers, for and on account thereof, in accordance with the law.

Witness my hand and official seal this 10th day of July, 2017.

Bill Deter, Mayor

Attest:

Karen Dewey, Town Clerk

TO: Mayor and Town Council

FROM: Kim H. Woods, Tax Collector

DATE: **July 10, 2017**

SUBJECT: Charge Off 2006 Property Taxes

North Carolina General Statute 105-378(a) establishes a continuing ten year statute of limitations against enforcement remedies provided by law for the collection of taxes or the enforcement of any liens. The ten year period is measured from the September 1st due date.

In accordance with General Statutes 105.378(a), I am hereby requesting authorization to charge off 2006 personal property taxes. The balance is as follows:

2006 $54.35

Respectfully submitted,

Kim H. Woods
Town of Weddington
Tax Collector

Witness my hand and official seal this 10th day of July, 2017.

_____
Bill Deter, Mayor

Attest:

_____
Karen Dewey, Town Clerk

TOWN OF WEDDINGTON
REGULAR TOWN COUNCIL MEETING
MONDAY, JUNE 12, 2017 7:00 P.M.
WEDDINGTON TOWN HALL
MINUTES

DRAFT

Mayor Bill Deter offered an invocation prior to the opening of the meeting.

1. OPEN THE MEETING Mayor Deter opened the June 12, 2017 Regular Town Council Meeting at 7:01 p.m.

2. PLEDGE OF ALLEGIANCE Mayor Deter led the Pledge of Allegiance.

3. DETERMINATION OF QUORUM Quorum was determined with all Councilmembers present: Mayor Bill Deter, Mayor Pro Tem Don Titherington, Councilmembers Mike Smith, Scott Buzzard, and Janice Propst. No members were absent.

Staff Present: Town Attorney Anthony Fox, Town Planner/Administrator Lisa Thompson, Town Clerk Karen Dewey, Finance Officer Leslie Gaylord

Visitors: Wayne Griffin, John Fisichello, Jeremia Murphy, Walton Hogan, Carol Hogan, William Carter, Marcea Wolf-Carter, Susan Harvey, Christoph Khouri, Anne Khouri, Anna-Marie Smith, Chris Duggan, Planning Board Chair Rob Dow

4. PUBLIC COMMENTS

Walter Hogan 5009 Laurel Grove Lane. Mr. Hogan thanked Councilmembers Propst and Smith for their work on organizing Food Truck Fridays. He appreciates the effort made to build a sense of community. Also thanks to Councilmember Propst on her work getting the new Weddington banners ordered and installed. Thank you.

Susan Harvey 2027 Meadow Run Drive. Ms. Harvey expressed concern with the flooding from the WCWAA fields. Ms. Harvey's comments are hereby submitted for the record.

5. ADDITIONS, DELETIONS AND/OR ADOPTION OF THE AGENDA Staff requested the removal of 5/8/2017 closed session minutes from the closed session agenda as they need more time to review.

***Motion*:** Mayor Pro Tem Titherington made a motion to adopt the agenda as amended.
Vote: The motion passed with a unanimous vote.

6. CONSENT AGENDA

A. Approve Reduction of Bond # K09495848 for Atherton Estates Phase 2 from $1,249,111.70 to $78, 864.50

B. Approve Release of Bond #92607370 for water and sewer for Vintage Creek Subdivision in the amount of $224,341.28 and Reduction of Bond #929607371 for roadway construction in Vintage Creek Subdivision from $402,172.62 to $160,508.75.

Motion: Mayor Pro Tem Titherington made a motion to approve the Consent Agenda as presented.
Vote: The motion passed with a unanimous vote.

7. APPROVAL OF MINUTES

A. MAY 8, 2017 REGULAR MEETING MINUTES

Staff presented corrections in the minutes pertaining to the conditions for the Weddington Swim and Racquet Club CUP and the tax rate.

Motion: Mayor Pro Tem Titherington made a motion to approve the May 8, 2017 Regular Meeting Minutes with changes as outlined by staff.
Vote: The motion passed with a unanimous vote.

8. PUBLIC HEARING AND CONSIDERATION OF PUBLIC HEARING

A. DISCUSSION AND CONSIDERATION OF BUDGET ORDINANCE FOR FISCAL YEAR 2017-2018 BUDGET AND SET THE TAX RATE

Mayor Deter opened the public hearing.
No one signed up to speak.
Mayor Deter closed the public hearing.

Ms. Gaylord presented the budget *(the budget is hereby submitted for the record).*

Motion: Mayor Pro Tem Titherington made a motion to approve the Budget Ordinance for Fiscal Year 2017-2018 as outlined and set the tax rate at 5.2 cents per $100 assessed property value.
Vote: The motion passed with a unanimous vote.

B. DISCUSSION OF TEXT AMENDMENT TO SECTION 58-4 DEFINITIONS, SECTIONS 58-56, 58-56.1, 58-57, 58-57.1, 58-60, AND 58-61 PERMITTED USES AND ADD ARTICLE XI SMALL CELL TELECOMMUNICATIONS FACILITY AND SECTION 58-329 REQUIREMENTS.

Mayor Deter opened the public hearing.
No one signed up to speak.
Mayor Deter closed the public hearing.

DRAFT

Ms. Thompson presented the staff report. The Town Council is requested to consider a text amendment to Sec. 58-4 Definitions, Sec. 58-56, 58-56.1, 58-57, 58-57.1, 58-60, and 58-61 Permitted uses and add Article XI Small Cell Telecommunications Facility and Section 58-329 Requirements.

Small cell facilities (microcellular optical repeater equipment) are used to provide faster data coverage and capacity for mobile phone and device users. Requests for small cell antenna installations are expected to rise dramatically. Many cities and counties in the area are seeing requests by companies for installation.

No regulation can be enacted which prohibits the provision of personal wireless services. Any requests have to be approved by the Town in a "reasonable period of time". Decisions for denial shall be in written format and must include substantial supporting evidence.

While the Town has the right to manage limited aspects of these requests, we are limited by federal statutes. Basically, the Town may address the aesthetic issues such as design, color, height, placement of equipment, and location.

Mayor Pro Tem Titherington expressed concern that ground equipment can be 3 feet from the property lines.

Ms. Thompson suggested language to require the same setbacks in the zoning district in which the telecommunications facility is located.

Mayor Pro Tem Titherington stated that the text amendment uses two different measurements for the telecommunications facility; when it is located on a support structure, it is measured in cubic feet and when on the ground, it is measured in square feet.

Ms. Thompson researched other zoning codes and found this to be consistent. She also found that the other zoning codes gave the maximum area of the telecommunications facility on the ground as low as 10 square feet.

The Council discussed maximum area of ground equipment for telecommunication facilities.

Mayor Pro Tem Titherington mentioned that the permit for small cell telecommunication facilities would go through the staff approval process unless the facility exceeds 20% of the height or size of the support structure. He wanted to make sure Council and Planning Board are comfortable with this.

Motion: Mayor Pro Tem Titherington made a motion to approve Text Amendment to Section 58-4 Definitions, Sections 58-56, 58-56.1, 58-57, 58-57.1, 58-60, and 58-61 Permitted Uses and add Article XI Small Cell Telecommunications Facility and Section 58-329 Requirements with changes to requirements for ground equipment to read : ground equipment shall have a maximum footprint of ten (10) square feet with the maximum

height of four (4) feet and must be located and installed in accordance with the applicable setbacks in the zone which the property is classified.

Vote: The motion passed with a unanimous vote.

9. OLD BUSINESS

10. NEW BUSINESS

A. DISCUSSION AND CONSIDERATION OF FINAL PLAT FOR CARRINGDON SUBDIVISION PHASE 1; MAP 1 AND MAP 2

Ms. Thompson presented the staff report. M/I homes is seeking approval of their final plat application for 42 lots on 117.64 acres located at the north east and west corner of Weddington-Matthews Road and Beulah Church Road/Hemby Road intersection. Planning Board approved the Sketch Plan on December 21st, 2015. The Town Council approved the Preliminary Plat on September 12, 2016 with the following conditions: (Staff's responses to those conditions are *italicized).*

1. Development subject to review and final approval of construction documents by Town's Engineering Consultant, US Infrastructure. Applicant must provide proof of approval of the construction documents before commencing with construction. Significant changes to the site plan during construction document finalization may require a second planning board review.
   Review comments from USI were satisfactorily addressed, and all permits from the state were obtained for this project. The plans sealed on January 10, 2017 were recommended for acceptance by USI.

2. Development subject to review and approval/permitting of construction documents by Union County Public Works. Applicant must provide proof of approval of the construction documents before commencing with construction.
   Union County Public Works approved the plans. An accessibility letter was obtained by staff on March 3, 2017.

3. That NCDOT approval for left and right hand turns is attained.
   Internal roads were approved on January 17, 2017. The access permits were approved on January 30, 2017.

4. The emergency gate is installed and/or working with the adjoining Waybridge HOA for control and maintenance and to insure that it achieves the safety requirements of the volunteer fire department for emergency access.
   MI homes has an agreement with the Waybridge HOA to install a gate at the emergency access point. They will be required to build the access road per plan. In addition MI homes will install fencing on the line near the gate.

The Planning Board reviewed the final plats on May 22, 2017 and unanimously recommended approval.

DRAFT

The final plat is in conformity with the preliminary plat and construction plans therefore staff recommends approval of the Carringdon Subdivision Final Plat Phase 1; Map 1 and Map 2 with the following conditions:

1. The emergency access road, gate, and fencing shall be maintained by the Carringdon HOA.
2. Bond Estimates shall be approved by USI.
3. Performance and Maintenance Agreements to be approved by the Town Attorney.
4. Approval of CCR's by Town Attorney.

Mayor Pro Tem Titherington asked for clarification on the responsibility and ownership of the emergency access road and gate between Carringdon and Waybridge.

It was confirmed that MI Homes is responsible for the construction of the road and gate and the MI/Carringdon HOA will be responsible for the maintenance consistent with the CCR's.

Mayor Pro Tem Titherington heard that trees were removed in the undisturbed area. Has this been taken care of?

Mayor Deter spoke with a MI Home representative who consented to replace the trees with 15 evergreen trees at 8 to 10 feet tall to provide screening by November-December of this year in the disturbed area.

Mayor Pro Tem Titherington noted that site distance lines were missing on the final plat.

Ms. Thompson confirmed that DOT requires a 500 foot line of site. Typically we want to see those on preliminary plats so we keep the landscaping and sign monuments out of the line of site and ensure the grading is in compliance. We should add a condition that a 500 foot site line be added to the final plat.

Mayor Deter questioned the gravel emergency access road missing from this final plat. Ms. Thompson confirmed that the road is in a different phase and the easement will be on the final plat for that phase of the subdivision.

Motion: Mayor Pro Tem Titherington made a motion to approve the Carrington Subdivision Final Plat Phase 1; Map 1 and Map 2 with the following conditions:

- The emergency access road, gate, and fencing shall be constructed by MI Homes and maintained by the Carringdon HOA consistent with the CCR's
- Bond Estimates shall be approved by USI
- Performance and Maintenance Agreement to be approved by the Town Attorney
- Consistent with what MI Homes has consented to, planting 15 evergreen trees between 8 to 10 feet in height to be placed in the buffer

zone that was disturbed along the Waybridge Subdivision border by January 2018, to be approved by Town Planner
- 500 foot DOT line of sight shall be depicted on the Final Plat for both entrances.

Vote: The motion passed with a unanimous vote

B. DISCUSSION AND CONSIDERATION OF FINAL PLAT FOR TUSCAN RIDGE SUBDIVISION

Ms. Thompson presented the staff report. In 2015 Lawd Properties, LLC submitted a final plat application for 11 lots of the approved 13 lot conventional subdivision. The two lots accessed off Stirrup Ct. were not included in the final plat due to right-of-way issues. The issues were resolved and therefore the applicant is submitting a subdivision application to plat the final two lots, lots 11 and 12. The two lots meet the R40 setbacks and lot width. Both will be accessed off of Stirrup Court, with a walking path connection to Shagbark Lane between lots 4 and 13. The Planning Board reviewed the final plat on May 22, 2017 and unanimously recommended approval. Lots 11 and 12 are consistent with the approved preliminary plat and construction plans, therefore staff recommends approval.

Mayor Pro Tem Titherington stated that he lives in Providence Woods, the subdivision where Stirrup Court is located. He explained that the developer had to buy land from the Providence Woods HOA to get right of way access to lots 11 and 12. Mayor Pro Tem Titherington asked for clarification of which HOA lots 11 and 12 will belong to.

Mr. Wayne Griffin from Lawd Properties confirmed that they have been paying HOA dues to Providence Woods for lots 11 and 12 and that they do belong in Providence Woods South HOA. The Providence Woods HOA has approved plans and specifications for lots 11 and 12.

Mayor Pro Tem Titherington confirmed with Mr. Fox that there is a need to record a condition that lots 11 and 12 are a part of Tuscan Ridge HOA, but are upheld to the Providence Woods South HOA covenants.

Mr. Fox stated that the Town will need to see the CCR's that apply to lots 11 and 12.

Mr. Griffin stated that the Tuscan Ridge CCRs include language that states lots 11 and 12 are governed by whichever CCRs are the most stringent. Lots 11 and 12 are built to Tuscan Ridge standards, the more strict of the two subdivisions, but will be members of the Providence Woods South HOA.

Motion: Mayor Pro Tem Titherington made a motion to approve the Final Plat of Tuscan Ridge Subdivision, lots 11 & 12, with the understanding that the lots will be under the auspices of Providence Woods South Home Owners Association, as agreed upon by the builder and Providence Woods South Home Owners Association and contingent upon verification of the CCRs reviewed by Town Attorney.

Vote: The motion passed with a unanimous vote.

DRAFT

C. DISCUSSION AND CONSIDERATION OF SHORT TERM LEAVE OF ABSENCE POLICY *(The Short Term Leave of Absence Policy is hereby submitted for the record).*

Mayor Deter presented the background of the policy to provide 20 days paid leave for very specific situations: birth of a child, adoption of a child, or caring of immediate relative.

Mayor Pro Tem Titherington asked for confirmation of the wording in the example to read "may be eligible". Mr. Fox recommended defining who is an eligible employee.

Motion:	Councilmember Smith made a motion to approve the Short Term Leave of Absence Policy with the two changes recommended.
Vote:	The motion passed with a unanimous vote

This will be an amendment to the employee handbook by Council action on June 12, 2017.

D. DISCUSSION OF NOISE TEXT AMENDMENT

Councilmember Smith presented reasoning behind the need for this text amendment. He explained that the town has received numerous complaints, most recently a trash service picking up at 1:30 in the morning in one neighborhood and 4:30 in the morning in another neighborhood. He believes that it is appropriate to put something in place to guard the peace and tranquility of our residents. It is a quality of life issue. He believes Ms. Thompson did a good job encompassing the need. This ordinance will be enforceable by our deputies.

Mayor Pro Tem Titherington stated his support of the text amendment. He commented on the comparison to the County ordinance, maybe the Town should tweak the hours specific to construction noise/ lawn maintenance the day of the week versus hours on the weekends.

Mayor Deter suggested that in chapter 54 section 22.4, number 2, that "employee" should be changed to "person" to cover those contracted individuals. He asked for additional confirmation in section B-Remedies: - what does a "Court of Competent Jurisdiction" mean?

Mr. Fox answered that it basically means any court that has jurisdiction over the offense being investigated.

Mr. Buzzard asked who has the legal obligation to take the violator to court, the town or the resident.

Mr. Fox stated it's the town's ordinances so the town would go to court for an injunction and provide that as a service to the resident. Enforcement of the noise ordinance can be a bane to towns. What you will have is a remedy. The officer would show up and determine if they are in violation and cite them. If nothing happens they could arrest them.

DRAFT

Mr. Buzzard asked if this would take too much time or resources from our deputies. I'd rather have them be visible in all subdivision rather than spending all their time with noise ordinances that may be in one area.

Councilmember Smith confirmed that the deputies don't see the enforcement of this as something that would take away from their presence in the Town.

Ms. Thompson was given direction to give an update to the Planning Board.

E. DISCUSSION OF PUBLIC NUISANCE TEXT AMENDMENT

The Council generally discussed concerns over the drafted regulations that could become overburdening for the town and residents.

Councilmember Smith stated that he'd like the Council to at least take a look to see if any of the items in the drafted text that should be in our ordinances.

Mayor Pro Tem Titherington agreed that it needs to be narrowed down. We have a few cases that we want to help move along. How do we give the Town staff enough to enforce those specific quality of life issues?

The Council directed Ms. Thompson to summarize complaint calls made to Town Hall to help give focus and narrow down the text. The Council agreed to continue the discussion at the July Council Meeting.

F. DISCUSSION OF TOWN SURVEY

Mayor Deter opened the discussion of the town survey. Ms. Thompson presented different possibilities for conducting survey. It was noted that the survey is not in the budget.

The Council gave direction to Ms. Thompson to get examples from UNC Urban Institute. The Council agreed to continue the discussion of the town survey at the July Council Meeting and will focus on what direction to give the survey organization.

G. DISCUSSION AND CONSIDERATION OF BUDGET AMENDMENT FOR FISCAL YEAR 2016-2017 *(The Budget Amendment is hereby submitted for the record)*

Ms. Gaylord presented the staff report. This serves as a formal amendment required by state statute that basically just reclassifies line items. The property purchase is included in this amendment.

Mayor Pro Tem Titherington commented that without the property purchase, the Town would be operating at a surplus and because of the job Ms. Gaylord does, the Town is able to make long term investments.

DRAFT

Motion: Councilmember Buzzard made a motion to approve the Budget Amendment for Fiscal Year 2016-2017.
Vote: The motion passed with a unanimous vote

H. Discussion and Consideration of Entering into an Agreement with Board of Adjustment Attorney

The Council discussed the 3 candidates. Mr. Fox gave insight from his professional relationships with each candidate.

Motion: Councilmember Smith made a motion to authorize Town Administrator/Planner, Ms. Thompson, to enter into an agreement with Terry Sholar to serve as the Town of Weddington Board of Adjustment attorney.
Vote: The motion passed with a unanimous vote.

11. Update from Planner

Ms Thompson had no updates.

12. Code Enforcement Report (*The Code Enforcement Report is hereby submitted for the record).*

Mayor Deter had concerns with several of the violations.
Number 3: Highway 84 & Twelve Mile Creek Road – No change is violations in 7 months. Mr. Fox drafted a letter to address the violation. Fines continue to accrue.
Number 5 8119 Lake Providence Drive – How long does this need to be monitored before it's dropped from the report. Code Enforcement Officer can drop from the report, but he will still monitor
Number 6: 8319 Lake Providence Drive – can be dropped from the report.
Number 7: 8304 Foxbridge Drive – Town Planner will confirm permit status. If there is no valid permit issued, action will be taken.
Number 8: 2049 Fitzhugh Lane – removed from report
Number 9: 8425 Potter Road – removed from report
Number 10: 3045 Rock Ridge Pass – removed from report
Number 11: 250 Rea Road – resolved
Number 12: Antioch Plantation – what is the location and date of violation? Issue needs investigation. Consolidate with #13

Mayor Pro Tem Titherington had a comment on number 2: 4005 Ambassador Court. The neighbors are looking to petition NCDOT for paving, but there is an absentee landowner. Can the town help with a letter to the Trust or the attorney serving as the Trustee? NCDOT is willing to pave, but they must have all adjacent property owners consent. Can the Town act as a surrogate for the absentee property owner?

DRAFT

Councilmember Smith suggested contacting Representatives Craig Horn and Tommy Tucker to reach out to encourage DOT to pave the road. Since the road has less than 4 lots, DOT never accepted the road and is not required to pave it.

Council discussed options to support the property owners in getting the road resurfaced.

Council directed Staff to follow up with NCDOT Deputy Division Engineer Scott Cole to confirm if letter or resolution from the Council will be helpful in getting Ambassador Court paved without consent from the absentee property owner. If so, Staff will draft letter or resolution.

13. UPDATE FROM FINANCE OFFICER AND TAX COLLECTOR (*The monthly report is hereby submitted for the record)*

Ms. Gaylord presented the monthly financial report. She confirmed that the changes included are all reflected in the approved amended budget.

Mayor Deter asked for affirmation of the update budget changes and Ms. Gaylord confirmed that those changes were line item reclassifications.

14. PUBLIC SAFETY REPORT

Councilmember Smith is working to reorganize the Public Safety Committee.

Mayor Pro Tem Titherington mentioned discussion about Beulah Church Road getting repaved and seeing if we can reach out and get it straightened at the Twelve Mile Creek intersection as well.

Ms. Thompson presented an email from Lee Ainsworth that explained there would only be minor widening in certain areas of the resurfacing project. Funding is limited to that specific resurfacing work. There isn't a recent enough crash report to support the additional work and one will not be completed before the resurfacing project is done.

15. TRANSPORTATION REPORT

Councilmember Buzzard stated that although out of Weddington jurisdiction, the Tilley Morris Road closing to connect the roundabout at Waverly from June 20-26. With regard to Weddington roundabout, it looks like no later than 2021; they will try to fast track it, but will probably be no earlier than 2019.

Mayor Pro Tem Titherington requested that staff send an email to residents to notify them about the Tilley Morris Road closing and detour.

16. MOVE INTO CLOSED SESSION

Motion: Mayor Pro Tem Titherington moved to convene in closed session pursuant to NCGS 143.318.11 (a)(3) Consult with the Attorney to protect the attorney-client privilege; To consider and give instructions concerning a

potential or actual claim, administrative procedure, or judicial action; To consider and give instructions concerning judicial action titled Providence Volunteer Fire Department vs. Town of Weddington; and Town of Weddington vs. Cox.

Vote: The motion passed with a unanimous vote.

RECONVENE INTO OPEN SESSION

Mayor Deter called the meeting back to order at 9:20 p.m.

Motion: Mayor Pro Tem Titherington moved to amend the agenda to add approval of Fiscal Year 2017 audit contract with Rowell, Craven, and Short

Vote: The motion passed with a unanimous vote.

17. APPROVAL OF FISCAL YEAR 2017 AUDIT CONTRACT WITH ROWELL, CRAVEN, AND SHORT

Motion: Councilmember Buzzard moved to approve the Fiscal Year 2017 Audit Contract with Rowell, Craven, and Short

Vote: The motion passed with a unanimous vote.

18. COUNCIL COMMENTS

Councilmember Buzzard thanked everybody for coming and participating in their town.
Councilmember Propst thanked everybody for coming for participating and helping with Food Truck Fridays.

19. ADJOURNMENT

Motion: Mayor Pro Tem Titherington moved to adjourn the June 12, 2017 Regular Town Council Meeting at 9:21 p.m.

Vote: The motion passed with a unanimous vote.

_____
Bill Deter, Mayor

Adopted: _____

_____
Karen Dewey, Clerk

DRAFT

TOWN OF
W E D D I N G T O N

MEMORANDUM

TO: Mayor and Town Council

FROM: Lisa Thompson, Town Administrator/Planner

DATE: July 10, 2017

SUBJECT: Text amendment to Section 22-1 and 58-19 Regarding Noise

The Planning Board reviewed a text amendment which addresses various noise complaints received by the Town at their May meeting. Questions and concerns were raised around enforcement issues, the nature of complaints received by staff, and how the new text language relates to the County noise ordinance.

The Planning Board discussed the ordinance again on June 26th. They mentioned the temporary nature of these complaints and the responsibilities of HOA's.

The Planning Board suggested adopting the County nuisance ordinance. The County ordinance would not bring additional exposure to the Town and the deputies are familiar with the regulations. They mentioned that most of the differences between the draft provided by staff and the county ordinance are regulated by either State laws or covered by the Town's animal control ordinances.

The Board discussed adding our own civil penalties section. Board members in favor of the civil penalty stated that it gives staff and the deputy's options for enforcement and it could expedite compliance. Others were concerned about the legal fees, responsibility, liability and exposure the Town will undertake.

By a vote 5:1 the Board recommended to replace Section 22-1 with verbiage that adopts the County Ordinance and adds it as Appendix D. In addition they'd like the attorney to review the new language and note any exposure and shift of responsibility to the Town by adding civil penalties. Section 58-19 within the zoning ordinance shall be replaced with a reference to new Section 22-1 (attachment 1).

Staff recommends calling for a public hearing to be held on August 14, 2017 at the Weddington Town Hall at 7:00 PM for amendments to Section 22-1 and 59-19 regarding noise.

Attachment 1 – PB Recommended Text
Attachment 2 - Staff / Old Version Drafted Text w/ TC Amendments
Attachment 3 - County Ordinance/Appendix D

Attachment 1 – Planning Board Recommendation

Sec. 22-1. - Excessive noise prohibited; exemptions.

~~(a)~~

~~It is unlawful for any person to make, continue, or cause to be made any unreasonable and excessive noise which injures, endangers, or disturbs the comfort, repose, health, peace or safety of others within the town limits.~~

~~(b)~~

~~The following uses and activities shall be exempt from this section:~~

~~(1)~~

~~Noises of safety signals, warning devices, and emergency pressure relief valves.~~

~~(2)~~

~~Noises resulting from any authorized emergency, fire or law enforcement vehicle.~~

~~(3)~~

~~Noise resulting from the activities of a temporary duration permitted by law for which a license or permit therefor has been granted by the town.~~

~~(4)~~

~~Any aircraft or railroad equipment operated in conformity with or pursuant to state or federal law. Any aircraft operating under technical difficulties, in any kind of distress, under emergency orders of air traffic control or being operated pursuant to the declaration of an emergency under federal air regulations shall also be exempt.~~

~~(c)~~

~~This provision shall not be applied to a shooting range in existence prior to adoption of this code section, provided there has been no substantial change in use of the range.~~

~~**State Law reference**— Town may regulate noise, G.S. 160A-184.~~

Pursuant to G.S. 160A-184, the town has adopted, in its entirety, the county ordinance entitled "Union County Nuisance Ordinance," as amended from time to time by the Union County Board of Commissioners, which has been and will be deemed adopted as a resolution of the town; and such ordinance shall be in full force and effect to the same extent as if set out at length in this section; and the ordinance shall be in effect within the town's corporate limits.

A copy of the Union County Nuisance Ordinance is set out in appendix D to this Code.

Sec. 58-19. - Noise.

~~Every use of land must be operated in such a way that regularly recurring noises are not disturbing or unreasonably loud and do not cause injury, detriment or nuisance to any person of ordinary sensitivities.~~

See Section 22-1.

Attachment 2 – Original drafted text with Town Council changes from 6/12 meeting (in Red)

Sec. 22-1. - ~~Excessive noise prohibited; exemptions.~~ **Unreasonably loud noise.**

(a) It is unlawful for any person to make, continue, or cause to be made any unreasonable and excessive noise which injures, endangers, or disturbs the comfort, repose, health, peace, or safety of others within the town limits.

(b) **In determining whether a *noise* is unreasonably loud, the following factors incident to such *noise* shall be considered:**

(1)Time of day;
(2)Proximity to residential structures;
(3)Whether the *noise* is recurrent, intermittent or constant;
(4)The volume and intensity;
(5)Whether the *noise* has been enhanced in volume or range by any type of electronic or mechanical means;
(6)The character and zoning of the area; and
(7)Whether the *noise* is subject to being controlled without unreasonable effort or expense to the creator thereof.

Sec. 22-2. Particular sounds prohibited.

The following acts and activities, among others, are hereby declared to be unreasonably loud and disturbing sound levels in violation of section 22-1. This enumeration shall not be construed to be an exclusive list of activities or acts which violate section 22-1:

(a) The discharge into the open air of the exhaust of any stationary internal combustion engine, motor vehicle or motor boat engine, except through a muffler or other device which effectively prevents unreasonably loud and disturbing or explosive sounds there from.

(b) The firing, discharge or ignition of squibs, firecrackers, gunpowder or other pyrotechnics, except with a permit as set forth with the Union County Fire Marshal.

(c) The keeping of any animal or bird by which causing frequent or long continued noise shall disturb the comfort and repose of any person in the vicinity.

(d) The keeping or maintenance of any dog, when such dog habitually barks, howls or whines so as to cause serious annoyance to persons residing within a reasonable distance of the location where any such dog is kept or maintained and when such barking, howling, or whining interferes with the reasonable use and enjoyment of property owned or occupied by persons living within a reasonable distance of the location where the dog is kept or maintained. *Staff note: items (a-d) above could be deleted. The fireworks is repetitive with language below (22-3(a)(9); state law and the animal control ordinance cover the other activities as PB noted.*

(e) Operating a ~~front-end loader or other~~ truck for refuse collection except on Monday through Saturday between the hours of 7:00 a.m. and 8:00 p.m. The violator is the operator of the front-end loader or truck, the employer of the operator, and/or the person whom owns the front-end loader or truck used by the operator.

~~(f) It is unlawful to construct, demolish, alter or repair any building or other structure in the town other than~~ Construction operations, including any building and land disturbing activities except between the hours of 7:00 a.m. and 9:00 p.m., Monday through ~~Saturday~~ Friday, and 8:00 a.m. and 9:00 p.m. on Saturday. ~~Private/Homeowner residential construction is permitted on Sundays from 10:00 AM until dusk.~~

(g) Operating electric and gas lawnmowers and other motor-driven domestic tools out-doors after 9:00 p.m. and before 7:00 a.m. Monday through Saturday and after 9:00 p.m. and before 9:00 a.m. on Sundays.

(h) It shall be unlawful to operate or allow the operation of any motor vehicle in the town:
(1) By spinning tires, racing engines or other operations which create unreasonably loud and disturbing noises.
(2) Off the boundaries of a public street for racing or other operations which create unreasonably loud and disturbing noises.
(3) To amplify sound produced by a radio, tape player, compact disc player or other sound-making device or instrument from within the motor vehicle so that the sound is audible from a distance of 50 or more feet from the source of the sound.

Sec. 22-3 Exemptions.

(a) The following uses and activities shall be exempt from this section:
(1)Noises of safety signals, warning devices, and emergency pressure relief valves.
(2)Noises resulting from any authorized emergency, fire or law enforcement vehicle.
(3)Noise resulting from the activities of a temporary duration permitted by law for which a license or permit therefore has been granted by the town.
(4)Any aircraft or railroad equipment operated in conformity with or pursuant to state or federal law. Any aircraft operating under technical difficulties, in any kind of distress, under emergency orders of air traffic control or being operated pursuant to the declaration of an emergency under federal air regulations shall also be exempt.
(5)Noise resulting from agricultural and horticultural operations conducted in a reasonable manner on property classified as a bona fide farm for ad valorem tax purposes.
(6) Noise resulting from emergency work necessary to restore property to a safe condition following a fire, accident or natural disaster, or to restore public utilities, or to protect persons or property from imminent danger.
(7) Noise resulting from any military or law enforcement activities of the federal, state, or any local government, to include military observances.
(8) Noise resulting from any event held in recognition of a community celebration, or national, state, or county events or public festivals or parades.
(9) Noise from lawful fireworks and *noise* makers on holidays and at religious ceremonies.
(10) Noise created by any public recreational activity.

(b) This provision shall not be applied to a shooting range in existence prior to adoption of this code section, provided there has been no substantial change in use of the range.

Sec. 22-4. -Enforcement and penalties.

(a) Civil penalty. Violation of this section shall subject the offender(s) to a civil penalty in the amount of $100.00. In the event there is more than one violation within any 30-day period, then the civil penalty shall be increased for each additional violation over one during such period, as follows. The date of the first violation shall establish the beginning date for the initial 30-day period. The next violation within that 30- day period shall be considered the second violation. Any violations that follow within that 30-day period shall be numbered sequentially. The penalty shall be: Second offense within same 30-day period: $250.00 Third offense within same 30-day period: $500.00 Fourth offense within same 30-day period: $750.00 Fifth and any subsequent offense within same 30-day period: $1,000.00

(1) Once the 30-day period has run from the "first violation," the next violation shall be considered to be a first violation for the purposes of establishing a new 30-day period. Each subsequent violation that follows more than 30 days from the previous first violation shall be a new first violation for the purpose of establishing a new 30- day period. In the event there are more than six violations within any 12-month period, then each violation after six shall subject the violator(s) to a civil penalty of $1,000.00.

(2) Violators shall be issued a written citation which must be paid within 72 hours of the issue date and time. The town attorney, or designee, is authorized to file suit on behalf of the town to collect any unpaid citations, and the town administrator, or designee, is authorized to verify and sign complaints on behalf of the town in such suits. A sheriff's deputy, animal control officer enforcing subject matter jurisdiction, or other ~~employee~~ person duly authorized to enforce the noise control ordinances may issue a citation for violations of this article.

(b) Remedies. This article may also be enforced through equitable remedies issued by a court of competent jurisdiction.

(c) Criminal penalty. In addition to, or in lieu of, such civil penalties or other remedies, violation of this article shall constitute a misdemeanor.

Sec. 22-5. - Unauthorized landings and aircraft prohibited. *(Renumbered only)*

Attachment 3 – Union County Nuisance Ordinance / Appendix D

NUISANCE ORDINANCE

WHEREAS, pursuant to G.S. § 153A-133, Union County may by ordinance regulate, restrict, or prohibit the production or emission of noises or amplified speech, music, or other sounds that tend to annoy, disturb, or frighten its citizens; and

WHEREAS, pursuant to G.S. 153A-123, Union County may by ordinance define, regulate, prohibit, or abate acts, omissions, or conditions detrimental to the health, safety, or welfare of its citizens and the peace and dignity of the county; and may define and abate nuisances.

NOW, THEREFORE, BE IT ORDAINED by the Union County Board of Commissioners as follows:

Section 1. It shall be unlawful and shall constitute a nuisance for any person or group of persons, regardless of number, to willfully make, continue, or cause to be made or continued any loud, raucous and disturbing noise, which term shall mean any sound which, because of its volume level, duration and character, annoys, disturbs, injures or endangers the comfort, health, peace or safety of reasonable persons of ordinary sensibilities within Union County. The term "loud, raucous and disturbing noise" shall be limited to loud, raucous and disturbing noises heard upon the public streets, in any public park, in any school or public building or upon the grounds thereof while in use, in any church or hospital or upon the grounds thereof while in use, upon any parking lot open to members of the public as invitees or licensees, or in any occupied residential unit which is not the source of the noise or upon the grounds thereof.

In determining whether a noise is unreasonably loud, raucous and disturbing, the following factors incident to such noise shall be considered: (i) time of day; (ii) proximity to residential structures; (iii) whether the noise is recurrent, intermittent or constant; (iv) the volume and intensity; (v) whether the noise has been enhanced in volume or range by any type of electronic or mechanical means; (vi) the character and zoning of the area; and (vii) whether the noise is subject to being controlled without unreasonable effort or expense to the creator thereof.

Section 2. The following acts are declared to be nuisances in violation of this Ordinance, but such enumeration shall not be deemed to be exclusive:

(1) Horns and Signal Devices. The sounding of any horn, whistle or signal device on any automobile, motorcycle, bus or other vehicle, except as a danger signal or as required by law, so as to create any unreasonable, loud or harsh sound, or the sounding of such device for an unnecessary and unreasonable period of time.

(2) Radios, Stereos, and Sound Reproduction. The playing, use, or operation, either from a motor vehicle or by a pedestrian, of any radio, tape or CD player, or other sound amplification device emitting sound that is audible from a distance of fifty (50) or more feet from the source of the sound.

(3) Pets. The keeping of any animal or bird, which, by causing frequent or long continued noise, shall disturb the comfort and repose of any person of ordinary sensibilities in the vicinity; provided, however, that this Ordinance shall not apply to a dog or dogs being used in a lawful hunt;

Section 3. The following shall be exempt from the application of this Ordinance:

(1) Noise resulting from the normal and lawful operations of any (i) industrial enterprise, (ii) commercial enterprise, or (iii) governmental facility or function.

(2) Noise resulting from agricultural and horticultural operations conducted in a reasonable manner on property classified as a bona fide farm for ad valorem tax purposes.

(3) Noise resulting from any authorized emergency or public safety vehicle, when responding to an emergency call or acting in the time of an emergency.

(4) Noise of safety signals, warning devices and emergency pressure relief valves.

(5) Noise resulting from emergency work necessary to restore property to a safe condition following a fire, accident or natural disaster, or to restore public utilities, or to protect persons or property from imminent danger.

(6) Noise resulting from motor vehicles in proper operating condition and properly equipped with the manufacturers' standard mufflers and noise-reducing equipment.

(7) Noise resulting from any military or law enforcement activities of the federal, state, or any local government, to include military observances.

(8) Noise resulting from construction operations from 7:00 a.m. to 9:00 p.m. on weekdays and from 8:00 a.m. to 9:00 p.m. on weekends for which building permits have been issued or for which building permits are not required; provided that all equipment is in proper operating condition and properly equipped with the manufacturers' mufflers and noise-reducing equipment.

(9) Noise from lawn mowers and other landscape maintenance equipment used between the hours of 7:00 a.m. and 9:00 p.m., provided that all equipment is in proper operating condition and properly equipped with the manufacturers' mufflers and noise-reducing equipment.

(10) Noise resulting from any event held in recognition of a community celebration, or national, state, or county events or public festivals or parades.

(11) Noise from lawful fireworks and noise makers on holidays and at religious ceremonies.

(12) Noise created by any aircraft flight operations which are specifically preempted by the Federal Aviation Administration.

(13) Noise of any bell or chime from any building clock, school, or church.

(14) Noise created by any public recreational activity.

(15) Noise from dogs and firearms while being used in a lawful hunt.

Section 4. Violation of any provision of this Ordinance shall subject the offender to one or more of the following enforcement actions. Each day that any violation continues after notification by the County that such violation exists shall be considered a separate offense for purposes of the penalties and remedies specified in this section.

(1) Violations shall constitute a Class 3 misdemeanor pursuant to G.S. 14-4, punishable by a fine of up to $200 and imprisonment in the discretion of the court.

(2) The County may apply for an appropriate equitable remedy from the General Court of Justice, including but not limited to mandatory and prohibitory injunctions and orders of abatement as allowed pursuant to

G.S. 153A-123. Such civil actions may name as defendants any person or persons creating, allowing the creation of, or assisting in the creation of any unlawful noise, including the owner of the premises from which the noise emanates and the person having actual control of the premises from which it emanates.

Section 5. If any provision of this Ordinance is adjudged invalid or if the application thereof to any person or in any circumstance is adjudged invalid, such invalidity shall not affect the validity of this Ordinance as a whole or of any part, subpart, sentence or clause thereof not adjudged invalid.

Section 6. This Ordinance is adopted the 8th day of September, 1998, and shall become effective the 9th day of September, 1998.

TOWN OF
W E D D I N G T O N

MEMORANDUM

TO: Mayor and Town Council

FROM: Lisa Thompson, Town Administrator/Planner

DATE: July 10, 2017

SUBJECT: Text amendment for public nuisances

A public nuisance is a condition or activity involving real property that amounts to an unreasonable interference with the health, safety, morals, or comfort of the community.

Both GS 160A-193 City Nuisance – Abatement Authority and GS 160A-174 (a) Public Nuisances and the General Police Power provides the Town with the ability to regulate conditions detrimental to the public health, safety and welfare of the residents.

The Planning Board and Council both agreed that the language can be overburdening for the Town and residents. The council requested that staff narrow down and summarize the complaints received.

Complaints received by staff could be narrowed down to the following:

Demolition debris
Tall grass
Abandoned junk/vehicles/machinery
Stumps/limbs/logs

Staff narrowed down the text below to these specific items.

Article IV – Public Nuisance

Sec. 34-91 CERTAIN CONDITIONS CONSTITUTE PUBLIC NUISANCE

The existence of any of the following situations within the Town limits is hereby declared to be dangerous and prejudicial to the public health or safety and to constitute a public nuisance. It shall be the shared responsibility of the owner of record and the occupant to maintain grass and ground cover vegetation and to cut/remove grass, weeds or any accumulation of any noxious matter listed below as often as necessary to comply with the provisions of this subchapter. Any of the following situations shall be subject to the provisions of this subchapter.

(A) The uncontrolled growth of noxious weeds or grass to an average height in excess of 12 inches, with the exception of agricultural uses; portions of lots used for flower gardens, shrubbery or vegetable gardens; naturally wooded areas, regulated wetlands or meadows; and, areas designated as undeveloped open space and/or designated conservation areas.

(B) Any accumulation of rubbish, trash or junk causing or threatening to cause a fire hazard, or causing or threatening to cause the accumulation of stagnant water, or causing or threatening to cause the

inhabitation therein of rats, mice, snakes or vermin of any kind which is or may be dangerous or prejudicial to the public health.

~~(C) Any accumulation of animal or vegetable matter that is offensive by virtue of odors or vapors or by the inhabitance therein of rats, mice, snakes or vermin of any kind which is or may be dangerous or prejudicial to the public health.~~

(D) Any accumulation of fallen trees, dead trees, or tree limbs of a sufficient quantity to cause or threaten to cause the habitation of mosquitoes, rats, mice, or vermin, except where located only within portions of parcels that are heavily wooded.

~~(E) Any vacant unsecured building including but not limited to houses, apartments, nonresidential buildings and accessory buildings, which contribute to or are likely to contribute to blighted neighborhood conditions such as vagrancy, trash accumulation, alcohol or illegal drug use, trespassing, prostitution, or other criminal activities. For purposes of this subchapter, an "unsecured building" shall include a roofed structure with any opening on the exterior skin of the building such as broken windows, unlocked or missing doors, and which is large enough and within ground level reach for a human or animal to enter. Such opening may be completely unimpeded or may have a covering which is hinged or sliding but is not locked or stabilized to prevent entry.~~

~~(F) Any structure, the remains of a structure, or portion that is in a damaged condition as the result of fire, wind, flood, or other disaster and that remains in an unrepaired state for a period of 120 days from the date of the disaster, or from the date of conclusion of any criminal, legal, or insurance investigation following the disaster, when one or more of the following conditions is present on site:~~

~~(1) Glass, metal or other sharp objects are in an accessible location;~~

~~(2) Any structure or any tree is unstable and may fall or collapse;~~

~~(3) Any substance is present that is hazardous or harmful to humans or animals;~~

~~(4) Any utility connections or lines, including but not limited to electric, natural gas, water, sewer, are in an accessible location and present a condition that may be hazardous or harmful to humans or animals.~~

(G) Any accumulation of demolition debris from structures or vegetation which remains on-site for longer than 30 days when no continuing construction or clean-up activity is progressing.

(H) Any dilapidated furniture, ~~refrigerator, stove or other appliance, hot tub, Jacuzzi~~, machinery, equipment, building material, or other item which is either wholly or partially rusted, wrecked, junked, dismantled, or in an inoperative condition, and which is not completely enclosed within a building, when such item(s) could cause or threaten to cause: a fire hazard, or the accumulation of stagnant water, or cause or the inhabitation of mosquitoes, other insects, rats, mice, snakes or vermin of any kind which is or may be dangerous or prejudicial to the public health.

~~(I) Any unmaintained swimming pool or its appurtenances which may be dangerous or prejudicial to public health and safety, including but not limited to pools with stagnant water, debris, dead animals or structural deficiencies, or which lacks proper swimming pool barriers as defined in the NC State Building Code.~~

~~(J) Any condition detrimental to the public health which violates the rules and regulations of the Union County public health agencies.~~

Sec. 34.92 INVESTIGATION

The Town Code Enforcement Officer or other responsible Town official or designee, upon notice from any person of the existence of any of the conditions in Sec. 34.91, shall investigate the location to determine whether, in fact, those conditions exist as to constitute a public nuisance as declared in Sec. 34.91.

Sec. 34.93 NOTICE TO ABATE

Upon a determination that those conditions constituting a public nuisance exist, the Town Code Enforcement Officer or other responsible Town official or designee shall notify the owner of record, and the occupant or person in possession of the premises of the conditions constituting a public nuisance and shall order the prompt abatement within 15 days from the date of notice. Notice of violation of this subchapter shall be provided in writing in one or more of the following:

(A) Written notice shall be either hand-delivered or mailed by first class mail to the owner of record and to any known occupant;

(B) Additionally, written notice may be sent electronically (fax, e-mail, or similar) to the property owner and occupant where such connection can be determined;

(C) Written notice may be posted in a conspicuous location on the property, where it can be expected to be sheltered from wind or rain and remain legible for a period of at least 48 hours;

(D) Written notice may be published in a newspaper which covers news in the local Weddington area, in print and/or electronic form;

(E) Written notice may be sent by first class mail or electronically to any interested parties, including but not limited to a financial institution, mortgage company, attorney, or property management organization. The form or forms of notice delivery shall be documented, along with time and date of posting, mailing, or other method of delivery. Receipt of first-class mailing to the owner as listed in Union County real estate tax records shall be assumed completed in absence of information provided to the Code Enforcement Officer to the contrary. The Code Enforcement Officer shall maintain this documentation, along with any verbal or written response to such notice(s). Effort shall be made to verify receipt of notice before the close of the 7-day appeal period.

Sec. 34.94 REQUEST FOR APPEAL HEARING

Within seven days from receipt of the notice provided for in Sec. 34.93, the owner, occupant, or person in possession of the premises may request a hearing before the Town Council and the Town Code Enforcement Officer whose investigation and findings resulted in the initial abatement order. The Town Council shall fix a time for the hearing, and the initial abatement order shall be temporarily suspended pending a hearing. At the hearing, the individual affected by the order shall be given the opportunity to present evidence to refute the findings which supported the abatement order. Upon completion of the hearing, the Town Council shall consider the evidence before them and shall either revoke the initial order, issue a final order which differs from the initial order, or reinstate the initial order as a final abatement order.

Sec. 34.95 ABATEMENT PROCEDURE

(A) Upon the occurrence of either of the following conditions, the Town Code Enforcement Officer or other responsible Town official or designee shall cause that condition to be removed or otherwise remedied by having Town employees or independent contractors to go upon those premises and remove or otherwise abate the identified nuisance under his/her supervision:

(1) A hearing is requested and held under Sec. 34.94 resulting in either a final order with modifications or the reinstatement of the initial order as a final order, and such order is not complied with; or

(2) No hearing is requested or held, and the person having been ordered to abate that public nuisance fails, neglects or refuses to abate or remove the condition constituting the nuisance within 15 days from receipt of the order.

(B) Any person who has been finally ordered to abate a public nuisance may within the time allowed by this chapter request the town in writing to remove that condition, the cost of which shall be paid by the person making the request. The person making the request shall sign a statement indicating the estimated cost for abatement is understood, and full payment shall be made to the Town within 10 days after site work is completed.

Sec. 34.96 CHRONIC VIOLATORS

The Town Code Enforcement Officer or other responsible Town official or designee may provide notification as a chronic violator to any property owner of record when the violator's property is found to meet the public nuisance criteria listed at Sec. 34.91. For purposes of this Chapter, a chronic violator is a person who was issued a notice of violation, declaring the owner's property a public nuisance under Sec. 34.91 at least three (3) times in the previous calendar year. The Town Code Enforcement Officer shall issue the initial annual notice as a chronic violator by registered or certified mail, and may also use additional methods of posting or delivery of such initial annual notice. The Town Code Enforcement Officer shall without further notice in the calendar year in which notice is given as a chronic violator, take action to remedy or abate the violation, and the expense of the abatement action shall become a lien upon the property and shall be collected as unpaid taxes.

Sec. 34.97 COST OF REMOVAL TO BE CHARGED TO OWNER

The actual cost incurred by the town in removing or otherwise remedying a public nuisance shall be charged to the owner or other person in possession of that lot or parcel of land and it shall be the duty of the Town Finance Department to mail a statement of those charges to the owner or other person in possession of those premises with instructions that those charges are due and payable within 30 days of receipt.

Sec. 34.98 UNPAID CHARGES TO BE LIEN ON PROPERTY

In the event charges for the removal or abatement of a public nuisance are not paid within 30 days after the receipt of a statement of charges as provided for in Sec. 34.97, those charges shall become a lien upon the land or premises where the public nuisance existed and shall be collected as unpaid taxes, as provided in G.S. Sec. 160A-193.

Sec. 34.99 OTHER REMEDIES

The procedure set forth in this chapter shall be in addition to any other remedies that may now or hereafter exist under law for the abatement of public nuisances and this chapter shall not prevent the Town from proceeding in a criminal action against any person, firm or corporation violating the provisions of this chapter as provided in G.S. Sec. 14-4.

TOWN OF
W E D D I N G T O N

MEMORANDUM

TO: Mayor and Town Council

FROM: Lisa Thompson, Town Administrator/Planner

DATE: July 10, 2017

SUBJECT: Text amendment to Section 58-58(4)(e)(1) – Minimum Lot Size

---

One of the action items taken from the Town Council retreat was for the Planning Board to review the minimum lot sizes in the RCD zoning district.

At the June 26, 2017 Planning Board meeting the Board reviewed a handout showing 11 RCD subdivisions approved throughout the last 12 years. The handout detailed the number of lots, average lot size, and units per acre for each subdivision.

A few board members commented on the percentage of lots at or below 13,000 square feet. They believed a RCD conservation subdivision is becoming the rule, rather than the exception. The Land Use Plan talks about using the RCD for certain tracts of land to enable meaningful open space. The worry with a few Planning Board members is the RCD's smaller lots is becoming a given for developers.

However, the Board believed developers need the flexibility the smaller lots provide them because of different topographical hardships, floodplain, and power line easements, etc. They gave an example of the Enclave subdivision. It has an average lot size of only 14,710 square feet yet has a lower density of .78 units per acre. This demonstrates that there were circumstances causing the smaller average lot size. In this case there are two large ponds, floodplain and power line easements.

By a vote 5:1, the Board recommended a text amendment to change the minimum lot size in a RCD from 12,000 square feet to 15,000 square feet, and for circumstances that cause undue hardships due to topography, easements, floodplains, and the like, the developer may apply to the Town Planner for relief from the minimum requirement. However, under no circumstance shall the minimum lot area be less than 13,000 square feet.

Staff has taken the Planning Board's recommendation and provided the following text for Town Council review.

Staff recommends calling for a public hearing to be held August 14, 2017 at 7:00 PM at the Weddington Town Hall to consider a text amendment to Section 58-58(4)(e)(1) – Minimum Lot Size.

Attached:
Lot size calculations

Sec. 58-58. - R-CD residential conservation district.

(4) *Standards for developments located in conservation subdivisions.*

e. *Dimensional standards.*

1. Minimum lot sizes: One of the primary differences between conventional subdivisions and conservation subdivisions is that although the overall allowable density levels between the two are the same, conservation subdivisions allow much smaller lot sizes. Accordingly, lots containing single-family dwellings may have a minimum area of ~~12,000~~ **15,000** square feet. **For circumstances that cause undue hardships such as topography, utility easements, floodplain, and the like, the developer may apply to the Planner for relief from the minimum requirement. However under no circumstance shall the minimum lot area be less than 13,000 square feet.** Easement lots are not permitted in a conservation subdivision.

	Subdivision	Lots	Acres	Units per acre	Average Lot AC	Average Lot SF	COS Required	Provided	
2015	Highclere	45	57	0.79	0.473	20,604	28.31	28.47	50%
2005	Lake Forest Preserve	211	260	0.81	0.4364	19,010	129.12	138.81	53%
2004	Providence Forest Estates	38	45	0.84	0.426	18,557	20.984	21.404	48%
2003	Thte Gardens on Providence	29	33	0.88	0.4557	19,850	16.5	16.6	50%
2015	Weddington Preserve	48	58.06	0.83	0.3968	17,285	29.03	32.15	55%
2014	The Falls	185	234.49	0.79	0.403	17,555	117.245	140.45	60%
2007	Brookhaven	33	47.655	0.69	0.3948	17,197	23.82	28.214	59%
2004	Hadley Park	62	67.163	0.92	0.436	18,992	33.37	33.53	50%
2016	The Enclave	42	53.52	0.78	0.3377	14,710	29.28	28.36	53%
2014	Vintage Creek	90	116.52	0.77	0.359	15,638	58.26	60.68	52%
2005	Stratford Hall	34	38.29	0.89	0.4891	21,305	19.145	19.15	50%
AVERAGES		817	1010.70	0.81	0.42	18,246	45.91	49.80	

19,862 above average best utilization
16,899 worst utilization lot averages

	vintage creek		**the falls**		**brookhaven**		**enclave**		AVERAGE %
	% of lots	no of lots	% of lots	no of lots	% of lots	no of lots	% of lots	no of lots	
13,000	32	30	30	38	0	0	62	26	30.96
14,000	28	26	14	18	33	11	14	6	22
15,000	12	11	3	4	21	7	5	2	10
16,000	12	11	9	11	21	7	0	0	10
17,000	4	4	12	15	9	3	5	2	7
18,000	-	0	2	3	0	0	5	2	2
19,000	6	6	5	7	3	1	0	0	4
20,000	3	3	8	10	0	0	5	2	4
21,000+	2	2	17	22	12	4	5	2	9

TOWN OF
W E D D I N G T O N

MEMORANDUM

TO: Mayor and Town Council

FROM: Lisa Thompson, Town Administrator/Planner

DATE: July 10, 2017

SUBJECT: Graham Allen R-CD Conventional- Preliminary Plat/Construction Plans

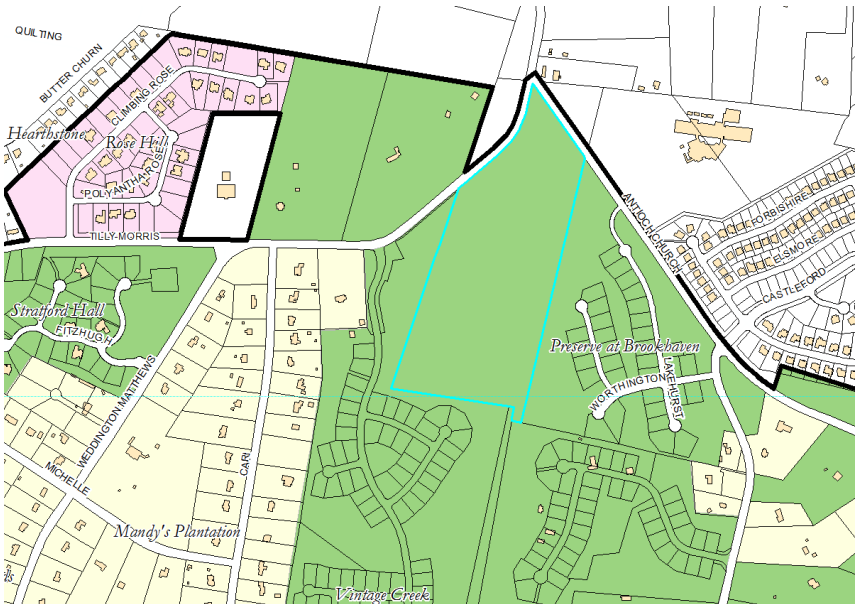

Graham Allen submitted a preliminary plat application for a 25 lot conventional subdivision on 41.53 acres located at the intersection of Weddington-Matthews Road and Antioch Church Road.

Application Information:
Date of Application: October 12, 2016
Applicant/Developer Name: Sunbelt Holdings SE I, LLC
Parcel ID#: 07150009F
Existing Zoning: R-CD
Existing Land Use: Vacant (Duke Power lines)
Proposed Land Use: Residential conventional subdivision

Project History:

A sketch plan was submitted in 2015. Public involvement meetings were held on August 18, 2015 and August 19, 2015. The sketch plan was approved by the town planner, Mr. Burton on October 28, 2015.

The preliminary plat/construction documents were submitted on October 12, 2016. Upon staff review, it was discovered that the approved cul-de-sac length didn't meet the requirements within the Weddington Subdivision Ordinance. The applicant applied for a modification of the subdivision ordinance to extend the length of the cul-de-sac which was approved by Town Council on January 9, 2017.

Project Information:

The proposed subdivision contains 25 lots on 41.53 acres with a density of .60 units per acre. The developer is proposing a conventional subdivision which requires a minimum 40,000 square foot lot size and a minimum 10% open space. All lots meet the minimum lot widths and front, side and rear yard setbacks.

The tract includes a 160' wide existing power line easement along the eastern boundary. Only 50% of the easement may be counted towards open space. The remaining open space is contained by wetlands, detention and viewshed buffers.

The 100' viewshed buffer will include a 10' landscape buffer along the thoroughfares, except where the power line easement is located.

The subdivision will be served by Union County Public Water and Sewer.

The subdivision is accessed by entrances on both Antioch Church Road and Weddington Matthews Road. The entrance at Antioch Church Road will include both right and left turn lanes. The entrance off of Weddington Matthews Road will be a right-in/right-out only. The existing median on Weddington Matthews Road will remain.

The Town Engineer approved the construction plans and they have been submitted to other outside review agencies including NCDOT, Public Works, NCDEQ and the Army Corp. Staff has received approval letters from NCDEQ, NCDOT and the Army Corp. thus far.

A draft maintenance plan and CCRs have been submitted for review.

Planning Board Review

The Planning Board reviewed the plat on June 26, 2017 and unanimously recommended approval.

Recommended Conditions of Approval

Staff recommends approval of the preliminary plat/construction plans with the following conditions:

1. The Applicant must provide approvals from all local, state, and federal agencies prior to commencing construction.

2. The maintenance plan and agreement shall be reviewed by the town attorney.

COPYRIGHT © W.K. DICKSON & CO., INC. ALL RIGHTS RESERVED. REPRODUCTION OR USE OF THE CONTENTS OF THIS DOCUMENT, ADDITIONS OR ALTERATIONS BY ANY METHOD, ELECTRONIC OR OTHERWISE, WITHOUT THE PRIOR WRITTEN PERMISSION OF W.K. DICKSON & CO., INC. IS STRICTLY PROHIBITED. ANY UNAUTHORIZED REUSE OF THE CONTENTS OF THIS DOCUMENT OR ANY PART THEREOF WILL BE CONSIDERED TO BE MADE WITH KNOWLEDGE OF THE ILLEGALITY OF SUCH REUSE AND WILL BE PROSECUTED TO THE FULLEST EXTENT OF THE LAW. ANY REUSE OF THE CONTENTS OF THIS DOCUMENT WITHOUT WRITTEN VERIFICATION OR ADAPTATION BY W.K. DICKSON & CO., INC. FOR THE SPECIFIC PURPOSE INTENDED WILL BE AT SOLE RISK AND WITHOUT LIABILITY OR LEGAL EXPOSURE TO W.K. DICKSON & CO., INC. AND ANY REUSE OF THE CONTENTS OF THIS DOCUMENT FOR OTHER PROJECTS SHALL BE AT SOLE RISK AND WITHOUT LIABILITY OR LEGAL EXPOSURE TO W.K. DICKSON & CO., INC. ANY REUSE OF THE CONTENTS OF THIS DOCUMENT WITHOUT WRITTEN VERIFICATION OR ADAPTATION BY W.K. DICKSON & CO., INC. FOR THE SPECIFIC PURPOSE INTENDED WILL BE AT SOLE RISK AND WITHOUT LIABILITY OR LEGAL EXPOSURE TO W.K. DICKSON & CO., INC. AND ANY REUSE OF THE CONTENTS OF THIS DOCUMENT FOR OTHER PROJECTS SHALL BE AT SOLE RISK AND WITHOUT LIABILITY OR LEGAL EXPOSURE TO W.K. DICKSON & CO., INC. ANY REUSE OF THE CONTENTS OF THIS DOCUMENT WITHOUT WRITTEN VERIFICATION OR ADAPTATION BY W.K. DICKSON & CO., INC. FOR THE SPECIFIC PURPOSE INTENDED WILL BE AT SOLE RISK AND WITHOUT LIABILITY OR LEGAL EXPOSURE TO W.K. DICKSON & CO., INC. AND ANY REUSE OF THE CONTENTS OF THIS DOCUMENT FOR OTHER PROJECTS SHALL BE AT SOLE RISK AND WITHOUT LIABILITY OR LEGAL EXPOSURE TO W.K. DICKSON & CO., INC. ANY REUSE OF THE CONTENTS OF THIS DOCUMENT WITHOUT WRITTEN VERIFICATION OR ADAPTATION BY W.K. DICKSON & CO., INC. FOR THE SPECIFIC PURPOSE INTENDED WILL BE AT SOLE RISK AND WITHOUT LIABILITY OR LEGAL EXPOSURE TO W.K. DICKSON & CO., INC. AND ANY REUSE OF THE CONTENTS OF THIS DOCUMENT FOR OTHER PROJECTS SHALL BE AT SOLE RISK AND WITHOUT LIABILITY OR LEGAL EXPOSURE TO W.K. DICKSON & CO., INC.

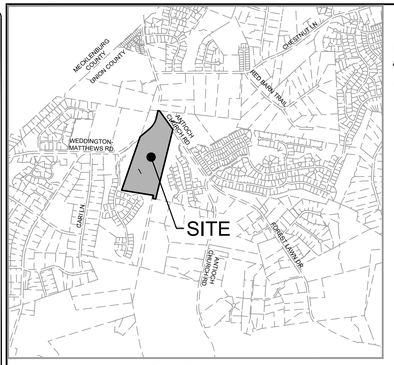

VICINITY MAP
SCALE: 1" = 2,000'

GRAHAM ALLEN SUBDIVISION

TOWN OF WEDDINGTON, SANDY RIDGE TOWNSHIP, UNION COUNTY, NORTH CAROLINA

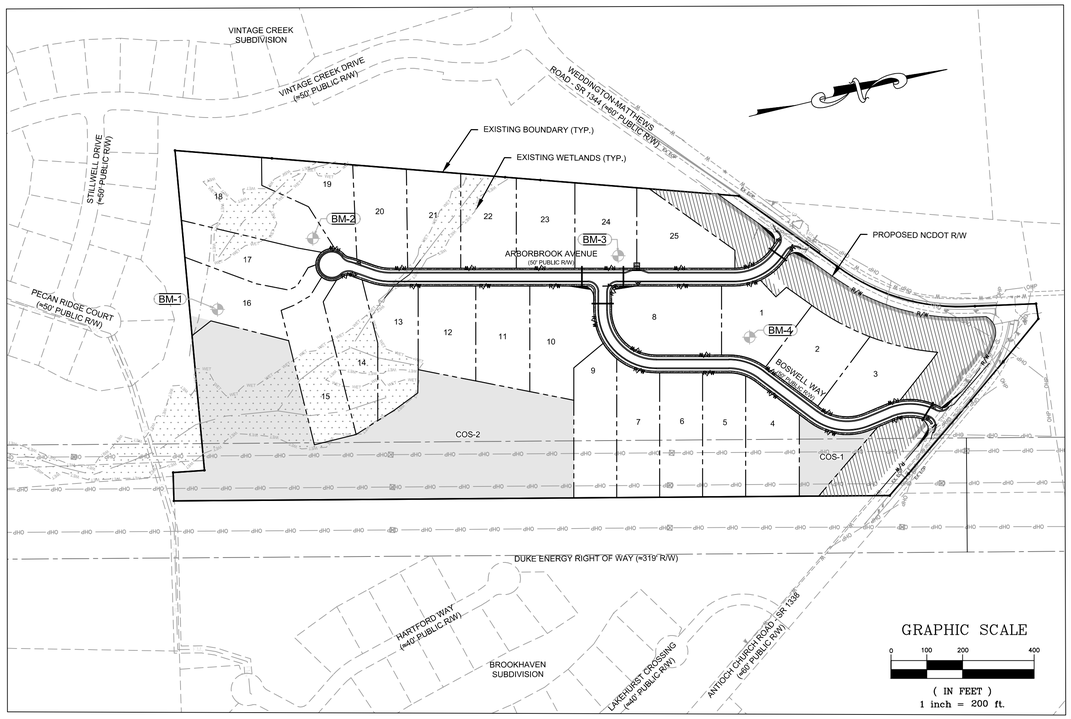

SITE STATISTICS:

PARCEL NUMBER:	07150009F
DEED REFERENCE:	DB 3781, PG 856
ZONING:	R-CD (CONVENTIONAL)
EXISTING USE:	UNDEVELOPED
PROPOSED USE:	SINGLE-FAMILY SUBDIVISION
PARCEL ACREAGE:	41.53 ACRES
OPEN SPACE REQUIRED:	4.15 ACRES (10.00%)
ALLOWABLE OPEN SPACE PROVIDED:	6.32 ACRES (15.22%)
NUMBER OF LOTS:	25
SMALLEST LOT SIZE:	0.92 AC. (LOT #12, 20, 22, 23, 24)
MINIMUM SETBACK:	
- FRONT	50'
- SIDE	15'
- SIDE CORNER	25'
- REAR	40'
PROPOSED IMPERVIOUS AREA:	15%
PARCEL FLOOD ZONE:	ZONE X

STREET DATA:

ARBORBROOK AVENUE:	1,348.29 LF
BOSWELL WAY:	1,220.48 LF
TOTAL LF OF RESIDENTIAL STREETS:	2,568.77 LF
TOTAL INTERNAL R/W ACREAGE:	2.95 AC

OWNER/DEVELOPER:

OWNER:
-NAME: WEDDINGTON INVESTORS II, LLC
-ADDRESS: 3129 SPRINGBANK LANE, CHARLOTTE, NC 28226
-PHONE NUMBER: (704)-574-0316
-EMAIL: GALLEN@RAMANAGEMENTINC.COM

DEVELOPER:
-NAME: SUNBELT HOLDINGS SE I, LLC (GRAHAM ALLEN)
-ADDRESS: 3129 SPRINGBANK LANE, CHARLOTTE, NC 28226
-PHONE NUMBER: (704)-641-2623
-EMAIL: GALLEN@RAMANAGEMENTINC.COM

SURVEYOR/ENGINEER:

SURVEYOR:
-NAME: CHRISTOPHER D. FAULK, PLS, METROLINA ENGINEERING & SURVEYING ASSOCIATES
-ADDRESS: 1325 HARDING PLACE, CHARLOTTE, NC 28204
-PHONE NUMBER: (704)-334-1325
-DATE COMPLETED: DECEMBER 2015-JANUARY 2016

OFFSITE SURVEYOR:
-NAME: THANE BISHOP, PLS, SUMMIT OF THE CAROLINAS, P.C.
-ADDRESS: 7714 MATTHEWS-MINT HILL ROAD, MINT HILL, NC, 28227
-PHONE NUMBER: (980)-859-3249
-DATE COMPLETED: SEPTEMBER 2016

ENGINEER:
-NAME: BRYAN E. THOMAS, PE, W.K. DICKSON
-ADDRESS: 1320 MAIN STREET, COLUMBIA, SC 29201
-PHONE NUMBER: (803)-786-4261
-EMAIL: BTHOMAS@WKDICKSON.COM

NOTICE TO CONTRACTOR

1) THE CONTRACTOR SHALL FIELD VERIFY THE ONSITE T.B.M. w/ EXISTING ELEVATIONS. THE CONTRACTOR SHALL IMMEDIATELY CONTACT W.K. DICKSON & CO., INC. @ 803-786-4261 IF ANY DISCREPANCIES ARE FOUND IN ELEVATIONS SHOWN.

2) PRIOR TO CONSTRUCTION, DIGGING, OR EXCAVATION THE CONTRACTOR IS RESPONSIBLE FOR LOCATING ALL UNDERGROUND UTILITIES (PUBLIC OR PRIVATE) THAT MAY EXIST AND CROSS THROUGH THE AREA(S) OF CONSTRUCTION, WHETHER INDICATED ON THE PLANS OR NOT. CALL "811" A MINIMUM OF 72 HOURS PRIOR TO DIGGING OR EXCAVATING. REPAIRS TO ANY UTILITY DAMAGED RESULTING FROM CONSTRUCTION ACTIVITIES SHALL BE THE RESPONSIBILITY OF THE CONTRACTOR.





INDEX OF DRAWINGS

Sheet Number	Sheet Title
1.0	COVER SHEET
2.0	EXISTING CONDITIONS AND DEMOLITION PLAN
3.0	OVERALL SITE PLAN
3.1	SITE PLAN - SHEET 1
3.2	SITE PLAN - SHEET 2
4.0	OVERALL GRADING AND DRAINAGE PLAN
4.1	GRADING AND DRAINAGE PLAN - SHEET 1
4.2	GRADING AND DRAINAGE PLAN - SHEET 2
4.3	STORM DRAINAGE PROFILES - SHEET 1
4.4	STORM DRAINAGE PROFILES - SHEET 2
4.5	STORM DRAINAGE PROFILES - SHEET 3
4.6	STORM DRAINAGE PROFILES - SHEET 4
5.0	ARBORBROOK AVE. - PLAN AND PROFILE
5.1	ARBORBROOK AVE. - PLAN AND PROFILE
5.2	BOSWELL WAY - PLAN AND PROFILE
5.3	BOSWELL WAY - PLAN AND PROFILE
6.0	PHASE I EROSION CONTROL OVERALL OVERVIEW
6.1	PHASE I EROSION CONTROL PLAN - SHEET 1
6.2	PHASE I EROSION CONTROL PLAN - SHEET 2
6.3	PHASE II EROSION CONTROL PLAN OVERVIEW
6.4	PHASE II EROSION CONTROL PLAN - SHEET 1
6.5	PHASE II EROSION CONTROL PLAN - SHEET 2
8.0	GENERAL NOTES
9.0	DETAILS - SHEET 1
9.1	DETAILS - SHEET 2
9.2	DETAILS - SHEET 3
9.3	DETAILS - SHEET 4
9.4	DETAILS - SHEET 5
9.5	DETAILS - SHEET 6
9.6	DETAILS - SHEET 7
10.0	ANTIOCH CHURCH ROAD IMPROVEMENT PLAN
10.1	TRAFFIC CONTROL AND ANTIOCH CHURCH ROAD STRIPPING PLAN
10.2	ANTIOCH CHURCH ROAD CROSS SECTIONS
10.3	ANTIOCH CHURCH ROAD CROSS SECTIONS
10.4	WEDDINGTON MATTHEWS ROAD ENTRANCE PLAN

WK DICKSON
community infrastructure consultants

WK DICKSON
community infrastructure consultants
1320 MAIN STREET
SUITE 400
COLUMBIA, SC 29201
(t)803-786-4261
(f)803-786-4263
WWW.WKDICKSON.COM



PROFESSIONAL SEAL

REVISION RECORD

NO.	DATE	DESCRIPTION	BY
1	4/24/17	REVISED PER COMMENTS FROM NCDOT, TOWN OF WEDDINGTON, UCPW, & NCDEQ	JEB
2	5/8/17	REVISED PER COMMENTS FROM NCDOT, TOWN OF WEDDINGTON, UCPW, & NCDEQ	TAK
3	6/20/17	REVISED PER COMMENTS FROM TOWN OF WEDDINGTON	WGB
4	6/28/17	REVISED PER COMMENTS FROM NCDOT	TAK

PRELIMINARY DESIGN - NOT RELEASED FOR CONSTRUCTION, RECORDATION, CONVEYANCES, OR SALES

PROJECT NAME:
GRAHAM ALLEN SUBDIVISION
TOWN OF WEDDINGTON, SANDY RIDGE TOWNSHIP, UNION COUNTY, NC

DRAWING TITLE:
COVER SHEET

PROJ. MGR.:	BET
DESIGN BY:	MDJ
DRAWN BY:	MDJ
PROJ. DATE:	OCT. 2016

DRAWING NUMBER:
1.0

WKD PROJ. NO.:
20160191.00.CL

P:\LATEX Prj Projects\Current Working\20_20160191XXX\2_Graham Allen Subdivision Redesign Ch\CADD\Dwg\Drawings\1.0 COVER SHEET.dwg, TAYLOR, 6/28/2017 10:20:30 AM

COPYRIGHT © W.K. DICKSON & CO., INC. ALL RIGHTS RESERVED. REPRODUCTION OR USE OF THE CONTENTS OF THIS DOCUMENT, ADDITIONS OR DELETIONS TO THE CONTENTS OF THIS DOCUMENT BY ANY METHOD, ELECTRONIC OR OTHERWISE, WITHOUT THE PRIOR WRITTEN CONSENT OF W.K. DICKSON & CO., INC. IS STRICTLY PROHIBITED. ANY UNAUTHORIZED REPRODUCTION OR USE OF THE CONTENTS OF THIS DOCUMENT, ADDITIONS OR DELETIONS TO THE CONTENTS OF THIS DOCUMENT, OR USE OF THIS DOCUMENT FOR ANY PURPOSE OTHER THAN THAT FOR WHICH IT WAS PREPARED, WITHOUT THE PRIOR WRITTEN CONSENT OF W.K. DICKSON & CO., INC. SHALL BE PRESUMED TO BE WILLFUL INFRINGEMENT OF COPYRIGHT. ANY REUSE OF THE DOCUMENTS FOR OTHER PROJECTS, EXTENSIONS TO THIS PROJECT, OR ANY OTHER PURPOSE, WITHOUT WRITTEN VERIFICATION OR ADAPTATION BY W.K. DICKSON & CO., INC. FOR THE SPECIFIC PURPOSE INTENDED WILL BE AT USER'S SOLE RISK AND WITHOUT LIABILITY OR LEGAL EXPOSURE TO W.K. DICKSON & CO., INC. ALL UNAUTHORIZED USERS AGREE TO INDEMNIFY AND HOLD HARMLESS W.K. DICKSON & CO., INC. FROM ANY AND ALL LIABILITY, CLAIMS, OR DAMAGES RESULTING FROM THE UNAUTHORIZED USE OF THE DOCUMENTS. THE ORIGINAL DOCUMENT IS STORED AT THE OFFICES OF W.K. DICKSON & CO., INC. IN COLUMBIA, SOUTH CAROLINA. THIS DOCUMENT SHALL BE CONSIDERED TO BE THE ONLY ORIGINAL AND ANY COPY, PRINTOUT, OR ELECTRONIC TRANSMITTAL SHALL BE CONSIDERED TO BE A COPY. IN THE EVENT OF ANY DISCREPANCY BETWEEN ANY ELECTRONIC COPY AND THE ORIGINAL PAPER COPY SEALED BY THE ENGINEER, THE ORIGINAL PAPER COPY SHALL GOVERN IN ALL CASES.

VINTAGE CREEK SUBDIVISION

VINTAGE CREEK DRIVE (≈50' PUBLIC R/W)

STILLWELL DRIVE (≈50' PUBLIC R/W)

PECAN RIDGE COURT (≈50' PUBLIC R/W)

WEDDINGTON-MATTHEWS ROAD - SR 1344 (≈60' PUBLIC R/W)

ANTIOCH CHURCH ROAD - SR 1338 (≈60' PUBLIC R/W)

HARTFORD WAY (≈40' PUBLIC R/W)

LAKEHURST CROSSING (≈40' PUBLIC R/W)

DUKE ENERGY RIGHT OF WAY (≈319' R/W)

BROOKHAVEN SUBDIVISION

EXISTING BOUNDARY (TYP.)

EXISTING WETLANDS (TYP.)

SOILS DELINEATION LINE

SOILS CLASSIFICATION (TYP.)

CENTERLINE OF STREAM

APPROXIMATE LOCATION OF TREE LINE

APPROXIMATE LOCATION OF EXISTING 16" WATER MAIN

POWER POLE TO BE RELOCATED. CONTRACTOR SHALL COORDINATE WITH UTILITY COMPANY.

EXISTING OVERHEAD POWER (TYP.)

EXISTING POWER STRUCTURE (TYP.)

APPROXIMATE LOCATION OF EXISTING 4" SANITARY SEWER FORCEMAIN

APPROXIMATE LOCATION OF EXISTING 16" WATER MAIN

BM-1

BM-2

BM-3

BM-4

Ex. EOP

CeC2

ApB

HeB

BENCHMARK TABLE			
DESCRIPTION	ELEVATION	NORTHING	EASTING
BM-1	700.231	478974.0690	1482697.3990
BM-2	716.824	479281.2090	1482571.5750
BM-3	742.837	480095.8140	1482830.2770
BM-4	744.681	480394.9600	1483141.9550

GRAPHIC SCALE

100 0 50 100 200 400

(IN FEET)
1 inch = 100 ft.

PRELIMINARY DESIGN - NOT RELEASED FOR CONSTRUCTION, RECORDATION, CONVEYANCES, OR SALES

WK DICKSON
community infrastructure consultants

1320 MAIN STREET
SUITE 400
COLUMBIA, SC 29201
(t)803-786-4261
(f)803-786-4263

WWW.WKDICKSON.COM

NORTH CAROLINA PROFESSIONAL ENGINEER SEAL 033121 BRIAN E. THOMAS 4/28/17

PROFESSIONAL SEAL

REVISION RECORD

NO.	DATE	DESCRIPTION	BY
1.	4/24/17	REVISED PER COMMENTS FROM NCDOT, TOWN OF WEDDINGTON, UCPW, & NCDEQ	JEB
2.	6/6/17	REVISED PER COMMENTS FROM NCDOT, TOWN OF WEDDINGTON, UCPW, & NCDEQ	TAK
3.	6/20/17	REVISED PER COMMENTS FROM TOWN OF WEDDINGTON	WGB
4.	6/28/17	REVISED PER COMMENTS FROM NCDOT	TAK

PROJECT NAME:
GRAHAM ALLEN SUBDIVISION
TOWN OF WEDDINGTON, SANDY RIDGE TOWNSHIP, UNION COUNTY, NC

DRAWING TITLE:
EXISTING CONDITIONS AND DEMOLITION PLAN

PROJ. MGR.:	BET
DESIGN BY:	MDJ
DRAWN BY:	MDJ
PROJ. DATE:	OCT. 2016

DRAWING NUMBER:
2.0

WKD PROJ. NO.:
20160191.00.CL

North Carolina 811 www.nc811.org

P:\ENTM Projects\Active\Grading\20160191\00\CL - Graham Allen Subdivision Redesign\CIVIL\CAD\Dwg\Drawings\2.0 EXISTING AND DEMO PLAN.dwg, @BOTTOM, 6/28/2017 10:22:11 AM

COPYRIGHT © W.K. DICKSON & CO., INC. ALL RIGHTS RESERVED. REPRODUCTION OR USE OF THE CONTENTS OF THIS DOCUMENT, ADDITIONS OR DELETIONS TO THIS DOCUMENT, IN WHOLE OR IN PART, WITHOUT WRITTEN CONSENT OF W.K. DICKSON & CO., INC., IS PROHIBITED. ONLY COPIES FROM THE ORIGINAL OF THIS DOCUMENT, MARKED WITH AN ORIGINAL SIGNATURE AND SEAL SHALL BE CONSIDERED TO BE VALID, TRUE COPIES.

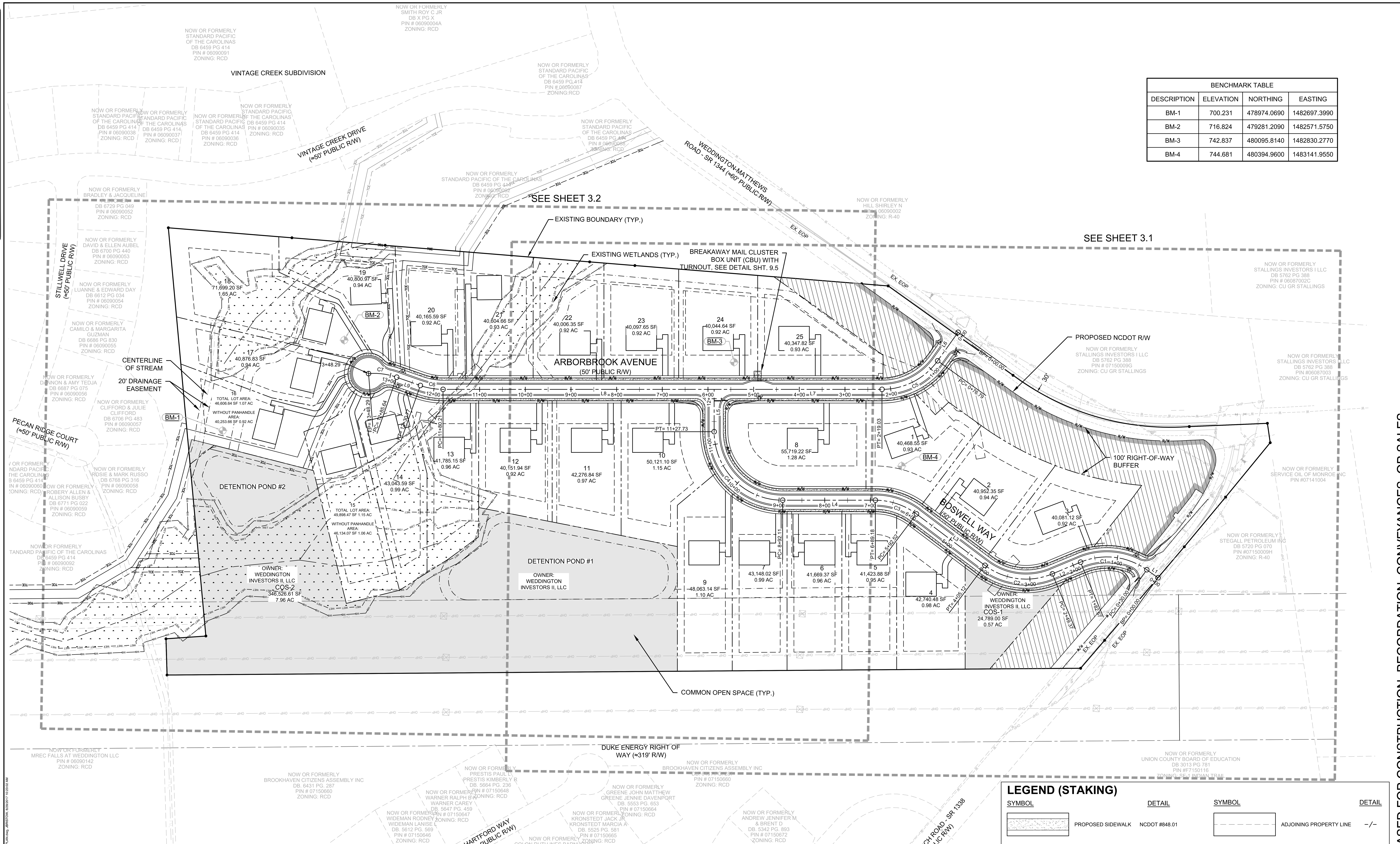

BENCHMARK TABLE

DESCRIPTION	ELEVATION	NORTHING	EASTING
BM-1	700.231	478974.0690	1482697.3990
BM-2	716.824	479281.2090	1482571.5750
BM-3	742.837	480095.8140	1482830.2770
BM-4	744.681	480394.9600	1483141.9550

COMMON OPEN SPACE TABLE

COS #	TOTAL ALLOWABLE NON-UTILITY ROW AREA	TOTAL UTILITY ROW AREA	ALLOWABLE UTILITY ROW AREA	ALLOWABLE CALCULATED COS AREA
COS-1	5,211.14	19,577.86	9,788.93	15,000.07
	0.12	0.45	0.22	0.34
COS-2	174,582.20	171,944.41	85,972.21	260,554.41
	4.01	3.95	1.97	5.98

GRAPHIC SCALE

(IN FEET)
1 inch = 100 ft.

CURVE TABLE

CURVE #	RADIUS	LENGTH	TANGENT	DELTA	PC	PT	PI STA	CHD BRG	CHD LENGTH
C1	150.00'	152.57'	83.62'	058°16'36"	0+30.00	1+82.57	1+13.62	S20°57'04"W	146.08'
C2	150.00'	155.76'	85.72'	059°29'40"	2+49.37	4+05.12	3+35.09	S21°33'36"W	148.85'
C3	150.00'	96.66'	50.07'	036°55'14"	5+92.52	6+89.18	6+42.60	S32°50'49"W	94.99'
C4	150.00'	235.62'	150.00'	090°00'00"	8+92.11	11+27.73	10+42.11	S59°23'12"W	212.13'
C5	150.00'	142.24'	76.98'	054°19'54"	0+76.79	2+19.03	1+53.77	S12°46'45"E	136.97'
C6	150.00'	50.56'	25.52'	019°18'52"	11+80.21	12+30.77	12+05.73	S24°02'38"W	50.33'
C7	150.00'	62.65'	31.79'	023°55'48"	12+85.64	13+48.29	13+17.43	S21°44'10"W	62.19'

LINE TABLE

LINE #	LENGTH	DIRECTION
L1	30.00'	S50°05'21.50"W
L2	66.80'	S08°11'14.10"E
L3	187.40'	S51°18'26.07"W
L4	202.93'	S14°23'12.47"W
L5	92.74'	N75°36'47.53"W
L6	76.79'	S39°56'41.49"E
L7	367.51'	S14°23'12.47"W
L8	593.66'	S14°23'12.47"W
L9	54.86'	S33°42'04.08"W

LEGEND (STAKING)

SYMBOL		DETAIL	SYMBOL		DETAIL
	PROPOSED SIDEWALK	NCDOT #848.01		ADJOINING PROPERTY LINE	–/–
	PROPOSED HANDICAP RAMP	NCDOT #848.05		PROPERTY/BOUNDARY LINE	–/–
	PROPOSED STOP SIGN	–/–		LOT LINE	–/–
	STORM DRAIN EASEMENT	–/–		TEMPORARY CONSTRUCTION EASEMENT	–/–
	SANITARY SEWER EASEMENT			BUFFER	–/–
	PROPOSED 2'-0" VALLEY GUTTER	NCDOT #846.01		RIGHT OF WAY	–/–
	BULDING SETBACK	–/–			

WK DICKSON
community infrastructure consultants

FILE PATH:M:\Projects\Sunbelt Holding SE II\20160191\00CL - Graham Allen Subdivision Redesign CD's\CADD\DWG\Sheets\3.0 OVERALL SITE PLAN.dwg, JBRISTOW, 6/29/2017 10:23:02 AM

PRELIMINARY DESIGN - NOT RELEASED FOR CONSTRUCTION, RECORDATION, CONVEYANCES, OR SALES

WK DICKSON
community infrastructure consultants
1320 MAIN STREET
SUITE 400
COLUMBIA, SC 29201
(t)803-786-4261
(f)803-786-4263
WWW.WKDICKSON.COM

NORTH CAROLINA PROFESSIONAL SEAL 033121 ENGINEER BRYAN E. THOMAS 6/28/17
PROFESSIONAL SEAL

REVISION RECORD

NO.	DATE	DESCRIPTION	BY
1.	4/24/17	REVISED PER COMMENTS FROM NCDOT, TOWN OF WEDDINGTON, UCPW, & NCDEQ	JEB
2.	6/6/17	REVISED PER COMMENTS FROM NCDOT, TOWN OF WEDDINGTON, UCPW, & NCDEQ	TAK
3.	6/20/17	REVISED PER COMMENTS FROM TOWN OF WEDDINGTON	WGB
4.	6/28/17	REVISED PER COMMENTS FROM NCDOT	TAK

PROJECT NAME:
GRAHAM ALLEN SUBDIVISION
TOWN OF WEDDINGTON, SANDY RIDGE TOWNSHIP, UNION COUNTY, NC

DRAWING TITLE:
OVERALL SITE PLAN

PROJ. MGR.:	BET
DESIGN BY:	MDJ
DRAWN BY:	MDJ
PROJ. DATE:	OCT. 2016

DRAWING NUMBER:
3.0

WKD PROJ. NO.:
20160191.00.CL

COPYRIGHT © W.K. DICKSON & CO., INC. ALL RIGHTS RESERVED. REPRODUCTION OR USE OF THE CONTENTS OF THIS DOCUMENT, ADVITORIA OR OTHERWISE, IN ANY MANNER WITHOUT THE EXPRESS WRITTEN PERMISSION OF W.K. DICKSON & CO., INC. IS PROHIBITED. ANY UNAUTHORIZED USE SHALL BE AT THE USER'S SOLE RISK AND WITHOUT LIABILITY TO W.K. DICKSON & CO., INC. AND THE USER AGREES TO INDEMNIFY AND HOLD W.K. DICKSON & CO., INC. HARMLESS FROM ANY AND ALL LOSSES, EXPENSES OR DAMAGES ARISING OUT OF OR RESULTING THEREFROM. ANY UNAUTHORIZED USE, REPRODUCTION OR MODIFICATION OF THIS DOCUMENT SHALL BE CONSIDERED TO BE MADE WITH KNOWLEDGE THAT IT IS FALSE. ALL RIGHTS RESERVED. THIS NOTICE IS NOT INTENDED TO AND DOES NOT LIMIT ANY RIGHTS OF W.K. DICKSON & CO., INC. UNDER APPLICABLE LAW. IF ANY PORTION OF THIS NOTICE IS HELD INVALID, THE REMAINING PORTIONS SHALL REMAIN IN FULL FORCE AND EFFECT. ANY COPY MADE OF THIS DOCUMENT SHALL BEAR A COPY OF THIS NOTICE. THE ELECTRONIC FILES FROM WHICH THIS DOCUMENT WAS PRINTED ARE THE PROPERTY OF W.K. DICKSON & CO., INC. AND ARE NOT TO BE USED FOR ANY PURPOSE WHATSOEVER WITHOUT THE WRITTEN PERMISSION OF W.K. DICKSON & CO., INC. THESE FILES ARE NOT TO BE COPIED OR GIVEN TO ANY OTHER PERSON OR ENTITY. ANY UNAUTHORIZED USE OF THE ELECTRONIC FILES SHALL BE AT THE USER'S SOLE RISK AND WITHOUT LIABILITY TO W.K. DICKSON & CO., INC. AND THE USER AGREES TO INDEMNIFY AND HOLD W.K. DICKSON & CO., INC. HARMLESS FROM ANY AND ALL LOSSES, EXPENSES OR DAMAGES ARISING OUT OF OR RESULTING THEREFROM. ANY UNAUTHORIZED USE, REPRODUCTION OR MODIFICATION OF THESE FILES SHALL BE CONSIDERED TO BE MADE WITH KNOWLEDGE THAT IT IS FALSE.

PIN # 06090002
ZONING: R-40

Ex. EOP

WEDDINGTON-MATTHEWS ROAD - SR 1344 (=60' PUBLIC R/W)

20' STORM DRAINAGE EASEMENT (TYP)

EXISTING PROPERTY BOUNDARY (TYP.)

40' REAR YARD SETBACK (TYP.)

EXISTING WETLANDS (TYP)

PROPOSED BUILDING SETBACK (TYP)

PROPOSED LOT LINE (TYP)

50' FRONT YARD SETBACK (TYP.)

50' R/W

22' EOP/EOP

27' BOC/BOC

ARBORBROOK AVENUE
(50' PUBLIC R/W)

BREAKAWAY MAIL CLUSTER BOX UNIT (CBU) WITH TURNOUT, SEE DETAIL SHT. 9.5

CURB RAMP (TYP.)

EXISTING CONCRETE MEDIAN

30' R

PROPOSED WEDDINGTON MATTHEWS ROAD ENTRANCE, SEE SHT. 10.2 FOR PLAN

10'x70' NCDOT SIGHT DISTANCE TRIANGLE

STOP SIGN

TWO (2) PROPOSED 4" SCH 40 PVC SLEEVES INSTALLED UNDER ROADWAY (TYP.)

EXTEND CONCRETE MEDIAN 50 LF SEE DETAIL SHT. 9.4

PROPOSED NCDOT RIGHT OF WAY

PROPOSED 100' LANDSCAPED STREET BUFFER (TYP) (BUFFER HAS EXISTING VEGETATION. IF THE OWNER DECIDES TO REMOVE EXISTING VEGETATION, THE TOWN SHALL BE CONTACTED TO DETERMINE REQUIRED LANDSCAPING.)

PROPOSED 2'-6" VALLEY GUTTER

5' UTILITY EASEMENT (TYP.)

TWO (2) PROPOSED 4" SCH 40 PVC SLEEVES INSTALLED UNDER ROADWAY (TYP.)

LINE OF SIGHT (TYP.)

EXISTING CONCRETE MEDIAN

10' PLANTED BUFFER STRIP. SEE DETAIL

20' STORM DRAINAGE AND POND ACCESS EASEMENT

15' SIDE YARD SETBACK (TYP.)

BOSWELL WAY
(50' PUBLIC R/W)

10' x 10' EASEMENT FOR FIRE HYDRANT (TYP)

10'x70' NCDOT SIGHT DISTANCE TRIANGLE

PROPOSED ANTIOCH CHURCH ROAD IMPROVEMENTS, SEE SHT. 10.0 FOR PLAN

DETENTION POND #1

OWNER: WEDDINGTON INVESTORS II, LLC

COMMON OPEN SPACE (TYP.)

EXISTING OVERHEAD POWER LINE (TYP.)

EXISTING OVERHEAD POWER STRUCTURE (TYP.)

EXISTING PROPERTY BOUNDARY (TYP.)

DUKE ENERGY RIGHT OF WAY (≈319' R/W)

STOP SIGN

PROPOSED NCDOT RIGHT OF WAY

PROPOSED 100' RIGHT OF WAY BUFFER. NO PLANTINGS ALLOWED WITHIN DUKE ENERGY RIGHT OF WAY

ANTIOCH CHURCH ROAD - SR 1338
(=60' PUBLIC R/W)

NOW OR FORMERLY
STALLINGS INVESTORS I LLC
DB 5762 PG 388
PIN # 06087002C
ZONING: CU GR STALLINGS

NOW OR FORMERLY
STALLINGS INVESTORS I LLC
DB 5762 PG 388
PIN # 07150009G
ZONING: CU GR STALLINGS

NOW OR FORMERLY
STALLINGS INVESTORS I
DB 5762 PG 388
PIN #06087003
ZONING: CU GR STALLIN

NOW OR FORMERLY
SERVICE OIL OF MONROE II
PIN #07141004

NOW OR FORMERLY
STEGALL PETROLEUM INC
DB 5720 PG 070
PIN #07150009H
ZONING: R-40

NOW OR FORMERLY
UNION COUNTY BOARD OF EDUCATION
DB 3013 PG 781
PIN #7715011E
ZONING: SF-1 INDIAN TRAIL

22	40,006.35 SF	0.92 AC
23	40,097.65 SF	0.92 AC
24	40,044.64 SF	0.92 AC
25	40,347.82 SF	0.93 AC
1	40,468.55 SF	0.93 AC
2	40,952.35 SF	0.94 AC
3	40,081.12 SF	0.92 AC
4	42,740.48 SF	0.98 AC
5	41,423.88 SF	0.95 AC
6	41,669.37 SF	0.96 AC
7	43,148.02 SF	0.99 AC
8	55,719.22 SF	1.28 AC
9	48,063.14 SF	1.10 AC
10	50,121.10 SF	1.15 AC
11	42,276.84 SF	0.97 AC
12	40,151.94 SF	0.92 AC
COS-1	24,789.00 SF	0.57 AC

GRAPHIC SCALE
60 0 30 60 120 240
(IN FEET)
1 inch = 60 ft.

PRELIMINARY DESIGN - NOT RELEASED FOR CONSTRUCTION, RECORDATION, CONVEYANCES, OR SALES

WK DICKSON
community infrastructure consultants
1320 MAIN STREET
SUITE 400
COLUMBIA, SC 29201
(t)803-786-4261
(f)803-786-4263
WWW.WKDICKSON.COM

NORTH CAROLINA PROFESSIONAL ENGINEER SEAL 033121 6/28/17 BRIAN E. THOMAS
PROFESSIONAL SEAL

REVISION RECORD

NO.	DATE	DESCRIPTION	BY
1.	4/24/17	REVISED PER COMMENTS FROM NCDOT, TOWN OF WEDDINGTON, UCPW, & NCDEQ	JEB
2.	6/6/17	REVISED PER COMMENTS FROM NCDOT, TOWN OF WEDDINGTON, UCPW, & NCDEQ	TAK
3.	6/20/17	REVISED PER COMMENTS FROM TOWN OF WEDDINGTON	WGB
4.	6/28/17	REVISED PER COMMENTS FROM NCDOT	TAK

PROJECT NAME:
GRAHAM ALLEN SUBDIVISION
TOWN OF WEDDINGTON, SANDY RIDGE TOWNSHIP, UNION COUNTY, NC

DRAWING TITLE:
SITE PLAN - SHEET 1

PROJ. MGR.:	BET
DESIGN BY:	MDJ
DRAWN BY:	MDJ
PROJ. DATE:	OCT. 2016

DRAWING NUMBER:
3.1

WKD PROJ. NO.:
20160191.00.CL

North Carolina 811 www.nc811.org

WK DICKSON
community infrastructure consultants

P:\LT Paths\LP Projects\Current Projects\20160191.00\CDs_Graham Allen Subdivision Redesign\COs\CAD\Civil\Sheets\3.1 SITE PLAN.dwg, WKDLEB, 6/28/2017 11:23:27 AM

COPYRIGHT © W.K. DICKSON & CO., INC. ALL RIGHTS RESERVED. REPRODUCTION OR USE OF THE CONTENTS OF THIS DOCUMENT, ADDITIONS OR DELETIONS TO THE CONTENTS OF THIS DOCUMENT BY ANY METHOD, ELECTRONIC OR OTHERWISE, WITHOUT THE PRIOR WRITTEN CONSENT OF W.K. DICKSON & CO., INC. IS STRICTLY PROHIBITED. ANY UNAUTHORIZED REUSE OF THESE DOCUMENTS SHALL BE AT THE USER'S SOLE RISK AND WITHOUT LIABILITY TO THE CONSULTANT. THE RECIPIENT OR USER OF THIS DOCUMENT SHALL INDEMNIFY AND HOLD THE CONSULTANT HARMLESS FROM ANY AND ALL LIABILITY, REAL AND ALLEGED, ARISING FROM ANY UNAUTHORIZED REUSE OF THESE DOCUMENTS. ELECTRONIC FILES ARE NOT TO BE USED FOR CONSTRUCTION PURPOSES. ONLY PLOTTED COPIES FROM THE ORIGINAL DOCUMENT MARKED WITH AN ORIGINAL SIGNATURE AND SEAL SHALL BE CONSIDERED TO BE VALID, TRUE COPIES.

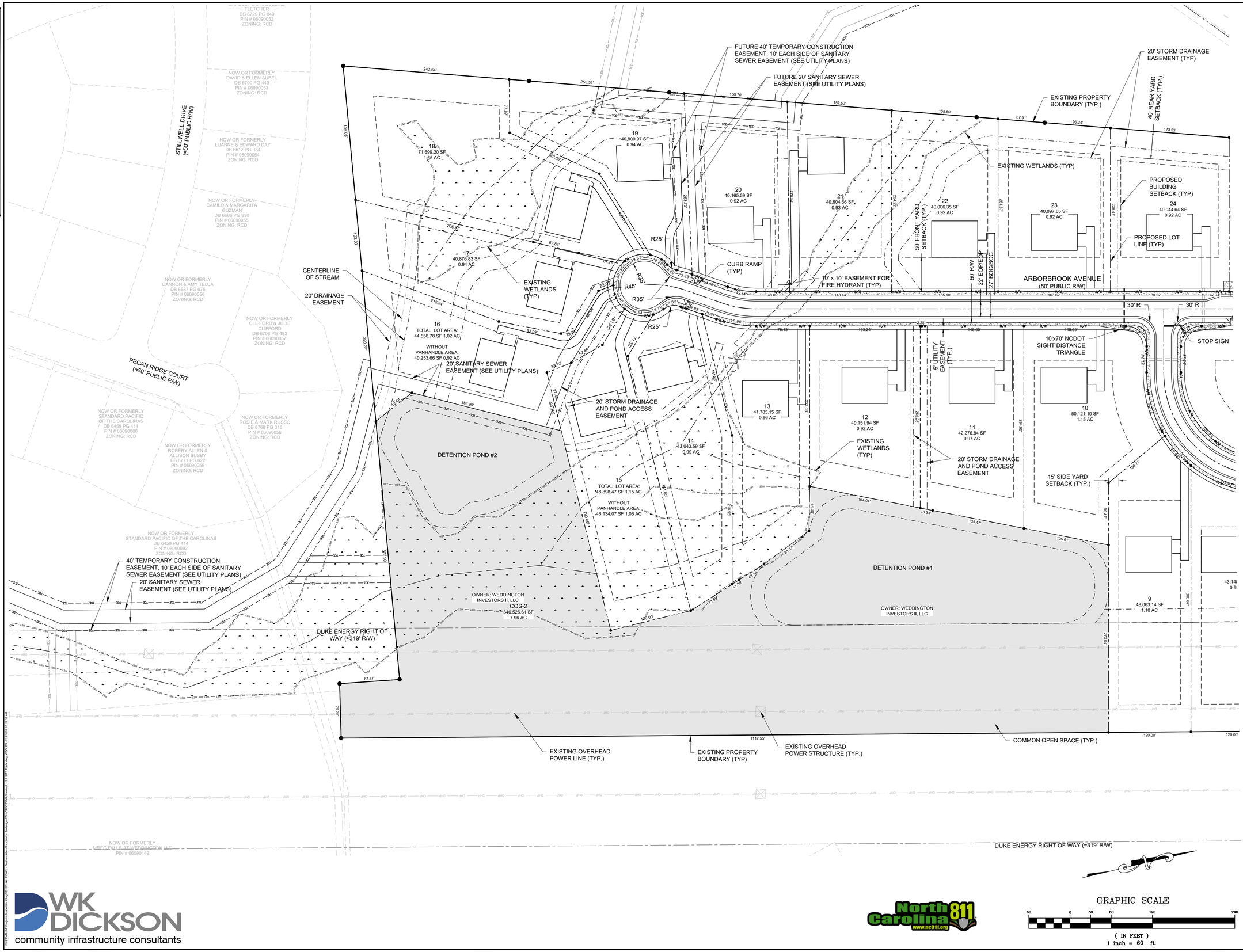

WK DICKSON
community infrastructure consultants
1320 MAIN STREET
SUITE 400
COLUMBIA, SC 29201
(t)803-786-4261
(f)803-786-4263
WWW.WKDICKSON.COM

NORTH CAROLINA PROFESSIONAL ENGINEER BRIAN E. THOMAS 033121 6/28/17

PROFESSIONAL SEAL

PRELIMINARY DESIGN - NOT RELEASED FOR CONSTRUCTION, RECORDATION, CONVEYANCES, OR SALES

REVISION RECORD

NO.	DATE	DESCRIPTION	BY
1.	4/24/17	REVISED PER COMMENTS FROM NCDOT, TOWN OF WEDDINGTON, UCPW, & NCDEQ	JEB
2.	6/6/17	REVISED PER COMMENTS FROM NCDOT, TOWN OF WEDDINGTON, UCPW, & NCDEQ	TAK
3.	6/20/17	REVISED PER COMMENTS FROM TOWN OF WEDDINGTON	WGB
4.	6/28/17	REVISED PER COMMENTS FROM NCDOT	TAK

PROJECT NAME:
GRAHAM ALLEN SUBDIVISION
TOWN OF WEDDINGTON, SANDY RIDGE TOWNSHIP, UNION COUNTY, NC

DRAWING TITLE:
SITE PLAN - SHEET 2

PROJ. MGR.:	BET
DESIGN BY:	MDJ
DRAWN BY:	MDJ
PROJ. DATE:	OCT. 2016

DRAWING NUMBER:
3.2

WKD PROJ. NO.:
20160191.00.CL

GRAPHIC SCALE
60 0 30 60 120 240
(IN FEET)
1 inch = 60 ft.

WK DICKSON
community infrastructure consultants

North Carolina 811 www.nc811.org

FILEPATH:P:\Projects\Graham Allen Subdivision Redesign CDs\CAD\Civil\Graham 3.2 SITE PLAN.dwg, WGB, 6/28/2017 10:23:12 AM

COPYRIGHT © W.K. DICKSON & CO., INC. ALL RIGHTS RESERVED. REPRODUCTION OR USE OF THE CONTENTS OF THIS DOCUMENT, ADDITIONS OR DELETIONS TO THIS DOCUMENT, IN WHOLE OR IN PART, WITHOUT WRITTEN CONSENT OF W.K. DICKSON & CO., INC., IS PROHIBITED. ONLY COPIES FROM THE ORIGINAL OF THIS DOCUMENT, MARKED WITH AN ORIGINAL SIGNATURE AND SEAL SHALL BE CONSIDERED TO BE VALID, TRUE COPIES.

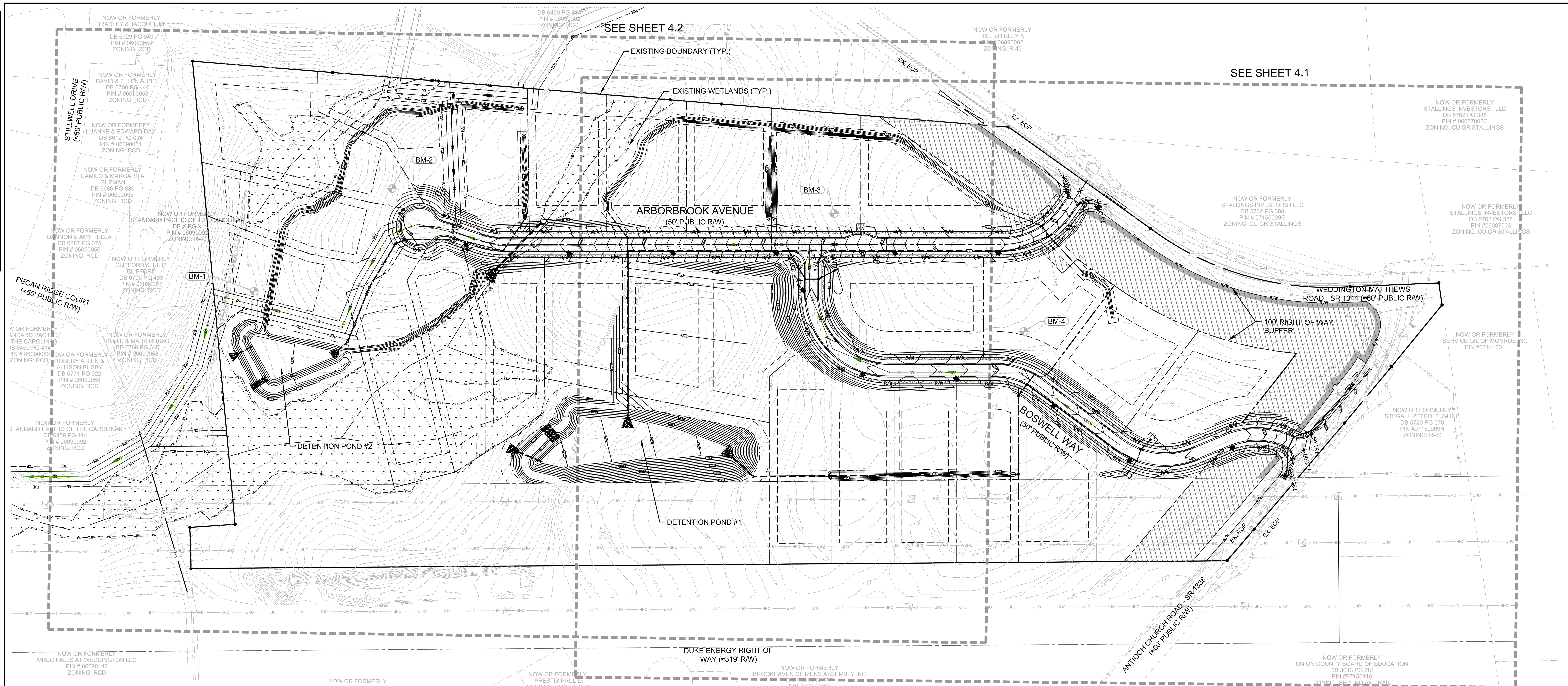

PIPE TABLE: PROPOSED STORM DRAINAGE

UPSTREAM NODE	DOWNSTREAM NODE	LENGTH (FT)	CONSTRUCTED SLOPE	SECTION SIZE (IN)	UPSTREAM INVERT ELEVATION	DOWNSTREAM INVERT ELEVATION	PIPE MATERIAL
BMP-1	HW-1	55	0.91%	30	709.50	709.00	REINFORCED CONCRETE
BMP-2	HW-2	32	1.00%	24	697.00	696.68	REINFORCED CONCRETE
CB-A6	JB-A5	28	0.50%	24	729.24	729.10	REINFORCED CONCRETE
CB-A6A	CB-A6	211	0.50%	24	730.39	729.34	REINFORCED CONCRETE
CB-A7	CB-A6A	48	0.50%	24	730.73	730.49	REINFORCED CONCRETE
CB-A8	CB-A7	24	1.00%	18	732.13	731.89	REINFORCED CONCRETE
CB-B1	CB-D5	63	0.92%	18	732.18	731.60	REINFORCED CONCRETE
CB-B2	CB-B1	24	1.00%	18	732.52	732.28	REINFORCED CONCRETE
CB-C1	CB-A6	25	1.00%	18	736.19	735.94	REINFORCED CONCRETE
CB-D3	DI-D2	91	0.80%	30	714.51	713.78	REINFORCED CONCRETE
CB-D4	CB-D3	277	4.23%	24	728.81	717.09	REINFORCED CONCRETE
CB-D5	CB-D4	34	3.41%	24	729.97	728.81	REINFORCED CONCRETE
CB-D6	CB-D5	189	3.08%	24	735.90	730.07	REINFORCED CONCRETE
CB-D7	CB-D6	242	0.92%	18	738.62	736.40	REINFORCED CONCRETE
CB-D8	CB-D7	76	1.27%	18	739.69	738.72	REINFORCED CONCRETE
CB-D9	CB-D8	24	1.00%	18	742.97	742.73	REINFORCED CONCRETE
CB-E1	CB-D3	24	1.50%	18	714.97	714.61	REINFORCED CONCRETE
CB-F1	CB-D4	24	1.50%	18	729.27	728.91	REINFORCED CONCRETE
CB-G1	CB-D6	24	1.00%	18	742.24	742.00	REINFORCED CONCRETE
CB-H4	JB-H3	21	1.00%	24	707.03	706.82	REINFORCED CONCRETE
CB-H5	CB-H4	102	1.00%	18	708.15	707.13	REINFORCED CONCRETE
CB-H6	CB-H5	89	0.98%	18	709.13	708.25	REINFORCED CONCRETE
CB-J2	FE-J1	26	1.00%	15	739.01	738.75	REINFORCED CONCRETE
CB-J3	CB-J2	26	1.00%	15	739.37	739.11	REINFORCED CONCRETE
CB-K2	FE-K1	49	0.50%	18	728.45	728.20	REINFORCED CONCRETE

PIPE TABLE: PROPOSED STORM DRAINAGE

UPSTREAM NODE	DOWNSTREAM NODE	LENGTH (FT)	CONSTRUCTED SLOPE	SECTION SIZE (IN)	UPSTREAM INVERT ELEVATION	DOWNSTREAM INVERT ELEVATION	PIPE MATERIAL
CB-K3	CB-K2	25	0.50%	18	728.68	728.55	REINFORCED CONCRETE
DI-A3	JB-A2	152	0.50%	30	726.14	725.38	REINFORCED CONCRETE
DI-A3A	DI-A3	120	0.50%	30	726.84	726.24	REINFORCED CONCRETE
DI-A9	CB-A8	26	1.00%	18	732.49	732.23	REINFORCED CONCRETE
DI-B3	CB-B2	38	1.00%	18	733.00	732.62	REINFORCED CONCRETE
DI-D2	HW-D1	236	0.82%	30	713.68	711.75	REINFORCED CONCRETE
DI-H7	CB-H6	75	1.07%	18	710.04	709.23	REINFORCED CONCRETE
FE-J4	CB-J3	26	1.00%	15	739.73	739.47	REINFORCED CONCRETE
FE-K4	CB-K3	43	0.50%	18	728.99	728.78	REINFORCED CONCRETE
FE-L1	CB-D8	98	1.00%	15	740.77	739.79	REINFORCED CONCRETE
FE-M1	CB-D9	86	2.84%	15	745.50	743.07	REINFORCED CONCRETE
FE-N1	CB-A7	30	0.86%	15	732.40	732.14	REINFORCED CONCRETE
HW-E2	CB-E1	69	1.50%	18	716.00	714.97	REINFORCED CONCRETE
HW-F2	CB-F1	42	1.50%	18	730.00	729.37	REINFORCED CONCRETE
HW-I2	HW-I1	128	2.73%	42	712.07	708.57	CMP
JB-A2	HW-A1	55	1.00%	30	720.35	719.80	REINFORCED CONCRETE
JB-A4	DI-A3A	240	0.50%	30	728.14	726.94	REINFORCED CONCRETE
JB-A5	JB-A4	152	0.50%	24	729.00	728.24	REINFORCED CONCRETE
JB-H1A	HW-H1	25	0.50%	24	698.63	698.50	REINFORCED CONCRETE
JB-H2	JB-H1A	112	5.00%	24	704.31	698.70	REINFORCED CONCRETE
JB-H3	JB-H2	99	2.37%	24	706.72	704.36	REINFORCED CONCRETE

BENCHMARK TABLE

DESCRIPTION	ELEVATION	NORTHING	EASTING
BM-1	700.231	478974.0690	1482697.3990
BM-2	716.824	479281.2090	1482571.5750
BM-3	742.837	480095.8140	1482830.2770
BM-4	744.681	480394.9600	1483141.9550

STRUCTURE TABLE: PROPOSED STORM DRAINAGE

STRUCTURE ID	RIM/TOP	INV. IN	INV. OUT
BMP-1	*		709.50' (HW-1)
BMP-2	*		697.00' (HW-2)
CB-A6	738.72'	729.34' (CB-A6A) 735.94' (CB-C1)	729.24' (JB-A5)
CB-A6A	735.64'	730.49' (CB-A7)	730.39' (CB-A6)
CB-A7	735.05'	731.89' (CB-A8) 732.14' (FE-N1)	730.73' (CB-A6A)
CB-A8	735.13'	732.23' (DI-A9)	732.13' (CB-A7)
CB-B1	739.70'	732.28' (CB-B2)	732.18' (CB-D5)
CB-B2	739.91'	732.62' (DI-B3)	732.52' (CB-B1)
CB-C1	739.19'		736.19' (CB-A6)
CB-D3	724.00'	717.09' (CB-D4) 714.61' (CB-E1)	714.51' (DI-D2)
CB-D4	735.54'	728.81' (CB-D5) 728.91' (CB-F1)	728.81' (CB-D3)
CB-D5	737.02'	730.07' (CB-D6) 731.60' (CB-B1)	729.97' (CB-D4)
CB-D6	745.24'	736.40' (CB-D7) 742.00' (CB-G1)	735.90' (CB-D5)
CB-D7	748.40'	738.72' (CB-D8)	738.62' (CB-D6)
CB-D8	745.81'	742.73' (CB-D9) 739.79' (FE-L1)	739.69' (CB-D7)
CB-D9	745.97'	743.07' (FE-M1)	742.97' (CB-D8)
CB-E1	724.00'	714.97' (HW-E2)	714.97' (CB-D3)
CB-F1	736.04'	729.37' (HW-F2)	729.27' (CB-D4)
CB-G1	745.24'		742.24' (CB-D6)
CB-H4	715.12'	707.13' (CB-H5)	707.03' (JB-H3)
CB-H5	716.54'	708.25' (CB-H6)	708.15' (CB-H4)
CB-H6	717.11'	709.23' (DI-H7)	709.13' (CB-H5)
CB-J2	743.21'	739.11' (CB-J3)	739.01' (FE-J1)
CB-J3	743.21'	739.47' (FE-J4)	739.37' (CB-J2)
CB-K2	732.50'	728.55' (CB-K3)	728.45' (FE-K1)
CB-K3	732.27'	728.78' (FE-K4)	728.68' (CB-K2)
DI-A3	732.31'	726.24' (DI-A3A)	726.14' (JB-A2)

* - SEE DETAILS

STRUCTURE TABLE: PROPOSED STORM DRAINAGE

STRUCTURE ID	RIM/TOP	INV. IN	INV. OUT
DI-A3A	733.51'	726.94' (JB-A4)	726.84' (DI-A3)
DI-A9	735.99'		732.49' (CB-A8)
DI-B3	736.75'		733.00' (CB-B2)
DI-D2	722.53'	713.78' (CB-D3)	713.68' (HW-D1)
DI-H7	713.54'		710.04' (CB-H6)
FE-J1	740.09'	738.75' (CB-J2)	
FE-J4	741.07'		739.73' (CB-J3)
FE-K1	729.79'	728.20' (CB-K2)	
FE-K4	730.58'		728.99' (CB-K3)
FE-L1	742.11'		740.77' (CB-D8)
FE-M1	746.84'		745.50' (CB-D9)
FE-N1	733.74'		732.40' (CB-A7)
HW-1	712.14'	709.00' (BMP-1)	
HW-2	699.18'	696.68' (BMP-2)	
HW-A1	722.81'	719.80' (JB-A2)	
HW-D1	715.25'	711.75' (DI-D2)	
HW-E2	717.75'		716.00' (CB-E1)
HW-F2	731.75'		730.00' (CB-F1)
HW-H1	701.00'	698.50' (JB-H1A)	
HW-I1	712.57'	708.57' (HW-I2)	
HW-I2	716.07'		712.07' (HW-I1)
JB-A2	732.25'	725.38' (DI-A3)	720.35' (HW-A1)
JB-A4	738.52'	728.24' (JB-A5)	728.14' (DI-A3A)
JB-A5	741.19'	729.10' (CB-A6)	729.00' (JB-A4)
JB-H1A	703.79'	698.70' (JB-H2)	698.63' (HW-H1)
JB-H2	710.38'	704.36' (JB-H3)	704.31' (JB-H1A)
JB-H3	715.43'	706.82' (CB-H4)	706.72' (JB-H2)

LEGEND (GRADING AND DRAINAGE)

SYMBOL	DETAIL	SYMBOL	DETAIL	SYMBOL	DETAIL
PROPOSED MINOR CONTOUR	-/-	PROPOSED SIDEWALK	-/-	PROPOSED DROP INLET	NCDOT STD. # 840.15
PROPOSED MAJOR CONTOUR	-/-	PROPOSED GRAVEL AND RIPRAP APRON	-/-	PROPOSED FLARED END SECTION	-/-
PROPOSED DRAINAGE SWALE	-/-	STORM DRAINAGE EASEMENT	-/-	PROPOSED HEADWALL	NCDOT STD. # 838.80
PROPOSED STORM DRAINAGE	-/-	PROPOSED CATCH BASIN	NCDOT STD. # 840.01		
PROPOSED JUNCTION BOX	NCDOT STD. # 840.32	PROPOSED DOUBLE CATCH BASIN	NCDOT STD. # 840.01 (SEE ADDITIONAL DETAIL ON SHT. 9.4)		

GRAPHIC SCALE

100 0 50 100 200 400

(IN FEET)
1 inch = 100 ft.

WK DICKSON
community infrastructure consultants

1320 MAIN STREET
SUITE 400
COLUMBIA, SC 29201
(t)803-786-4261
(f)803-786-4263

WWW.WKDICKSON.COM

NORTH CAROLINA PROFESSIONAL ENGINEER SEAL 033121 BRYAN E. THOMAS 6/28/17

PROFESSIONAL SEAL

REVISION RECORD

NO.	DATE	DESCRIPTION	BY
1.	4/24/17	REVISED PER COMMENTS FROM NCDOT, TOWN OF WEDDINGTON, UCPW, & NCDEQ	JEB
2.	6/6/17	REVISED PER COMMENTS FROM NCDOT, TOWN OF WEDDINGTON, UCPW, & NCDEQ	TAK
3.	6/20/17	REVISED PER COMMENTS FROM TOWN OF WEDDINGTON	WGB
4.	6/28/17	REVISED PER COMMENTS FROM NCDOT	TAK

PRELIMINARY DESIGN - NOT RELEASED FOR CONSTRUCTION, RECORDATION, CONVEYANCES, OR SALES

PROJECT NAME:
GRAHAM ALLEN SUBDIVISION
TOWN OF WEDDINGTON, SANDY RIDGE TOWNSHIP, UNION COUNTY, NC

DRAWING TITLE:
OVERALL GRADING AND DRAINAGE PLAN

PROJ. MGR.:	BET
DESIGN BY:	MDJ
DRAWN BY:	MDJ
PROJ. DATE:	OCT. 2016

DRAWING NUMBER:
4.0

WKD PROJ. NO.:
20160191.00.CL

North Carolina 811 www.nc811.org

FILE PATH:M:\Projects\Sunbelt Holding SE I\20160191OOCL - Graham Allen Subdivision Redesign CD's\CADD\DWG\Sheets\4.0 OVERALL GRSD PLAN.dwg, JBRISTOW, 6/29/2017 10:25:08 AM

COPYRIGHT © W.K. DICKSON & CO., INC. ALL RIGHTS RESERVED. REPRODUCTION OR USE OF THE CONTENTS OF THIS DOCUMENT, ADVITORIAL OR OTHERWISE, IN ANY FORM OR BY ANY MEANS, ELECTRONIC OR MECHANICAL, INCLUDING BUT NOT LIMITED TO FACSIMILE, PHOTOCOPYING, RECORDING, OR ANY INFORMATION STORAGE AND RETRIEVAL SYSTEM, WITHOUT PERMISSION IN WRITING FROM W.K. DICKSON & CO., INC. IS PROHIBITED. ANY UNAUTHORIZED USE OF THE CONTENTS OF THIS DOCUMENT SHALL BE CONSIDERED TO BE MADE WITH THE KNOWLEDGE THAT IT IS A VIOLATION OF THE COPYRIGHT LAWS AND SUBJECT TO LEGAL ACTION. ANY REPRODUCTION OF THIS DOCUMENT SHALL BE MADE WITH AN ORIGINAL SIGNATURE AND SEAL AND SHALL BE CONSIDERED TO BE A TRUE COPY.

EXISTING BOUNDARY (TYP.)
20' PROPOSED STORM DRAINAGE EASEMENT (TYP.)
DIVERSION DITCH DD#1
PROPOSED SETBACK (TYP.)
PROPOSED LOT LINE (TYP.)
EXISTING WETLANDS (TYP.)
ARBORBROOK AVENUE (50' PUBLIC R/W)
DIVERSION DITCH DD#2
DIVERSION DITCH DD#3
EX. EOP
NOW OR FORMERLY STALLINGS INVESTORS I LLC DB 5762 PG 388 PIN # 07150009G ZONING: CU GR STALLINGS
INV OUT=736.98
EXISTING 18" RCP STORM DRAINAGE CULVERT
INV IN=738.39
CONTRACTOR SHALL PROVIDE POSITIVE DRAINAGE TO INLET (TYP.)
WEDDINGTON-MATTHEWS ROAD - SR 1344 (≈60' PUBLIC R/W)
100' RIGHT-OF-WAY BUFFER
DIVERSION DITCH DD#4
NOW OR FORMERLY STALLINGS INVESTOF DB 5762 PG 38 PIN #06087003 ZONING: CU GR STAL
NOW OR FORMERL SERVICE OIL OF MONRC PIN #07141004
BOSWELL WAY (50' PUBLIC R/W)
NOW OR FORMERLY STEGALL PETROLEUM INC DB 5720 PG 070 PIN #07150009H ZONING: R-40
CONTRACTOR SHALL FILL IN AREA WITH EXCESS CUT MATERIAL FROM THE SITE
PROPOSED RIP-RAP APRON (TYP.)
MIN. 1% BOTTOM SLOPE
DETENTION POND #1
PROPOSED STORM DRAINAGE (TYP.)
DIVERSION DITCH DD#8
CONTRACTOR SHALL PROVIDE POSITIVE DRAINAGE TO INLET (TYP.)
EXISTING BOUNDARY (TYP.)
EXISTING OVERHEAD POWER LINE (TYP.)
EXISTING OVERHEAD POWER STRUCTURE (TYP.)
DUKE ENERGY RIGHT OF WAY (≈319' R/W)
ANTIOCH CHURCH ROAD - SR 1538 (≈60' PUBLIC R/W)
NOW OR FORMERLY BROOKHAVEN CITIZENS ASSEMBLY INC DB. 5431 PG. 287 PIN # 07150660
NOW OR FORMERLY UNION COUNTY BOARD OF EDUCATION DB 3013 PG 781 PIN #F7150116 ZONING: SF-1 INDIAN TRAIL

1 40,006.35 SF 0.92 AC
2 40,952.35 SF 0.94 AC
3 40,081.12 SF 0.92 AC
4 42,740.48 SF 0.98 AC
5 41,423.88 SF 0.95 AC
7 43,148.02 SF 0.99 AC
8 55,719.22 SF 1.28 AC
9 48,063.14 SF 1.10 AC
10 50,121.10 SF 1.15 AC
11 42,276.84 SF 0.97 AC
12 40,151.94 SF 0.92 AC
22 40,006.35 SF 0.92 AC
23 40,097.65 SF 0.92 AC
24 40,044.64 SF 0.92 AC
25 40,347.82 SF 0.93 AC
COS-1 24,789.00 SF 0.57 AC

GRAPHIC SCALE
60 0 30 60 120 240
(IN FEET)
1 inch = 60 ft.

NOTE:
1. OWNER TO GRADE LOTS 1, 2, AND 3 FOR PROPER DRAINAGE TO STRUCTURES C1 AN A9 AS APPROPRIATE.

PRELIMINARY DESIGN - NOT RELEASED FOR CONSTRUCTION, RECORDATION, CONVEYANCES, OR SALES

WK DICKSON
community infrastructure consultants
1320 MAIN STREET
SUITE 400
COLUMBIA, SC 29201
(t)803-786-4261
(f)803-786-4263
WWW.WKDICKSON.COM

NORTH CAROLINA PROFESSIONAL ENGINEER BRIAN E. THOMAS 033121 4/28/17
PROFESSIONAL SEAL

REVISION RECORD

NO.	DATE	DESCRIPTION	BY
1.	4/24/17	REVISED PER COMMENTS FROM NCDOT, TOWN OF WEDDINGTON, UCPW, & NCDEQ	JEB
2.	6/6/17	REVISED PER COMMENTS FROM NCDOT, TOWN OF WEDDINGTON, UCPW, & NCDEQ	TAK
3.	6/20/17	REVISED PER COMMENTS FROM TOWN OF WEDDINGTON	WGB
4.	6/28/17	REVISED PER COMMENTS FROM NCDOT	TAK

PROJECT NAME:
GRAHAM ALLEN SUBDIVISION
TOWN OF WEDDINGTON, SANDY RIDGE TOWNSHIP, UNION COUNTY, NC

DRAWING TITLE:
GRADING AND DRAINAGE PLAN - SHEET 1

PROJ. MGR.:	BET
DESIGN BY:	MDJ
DRAWN BY:	MDJ
PROJ. DATE:	OCT. 2016

DRAWING NUMBER:
4.1
WKD PROJ. NO.:
20160191.00.CL

North Carolina 811 www.nc811.org

K:\Active Projects\Current Hosting Job 20160191\WDG - Graham Allen Subdivision\Redesign CDs\CAD\DWG\Sheet\1.4.1 GRAD PLAN.dwg, WBOLES, 6/29/2017 10:28:44 AM

COPYRIGHT © W.K. DICKSON & CO., INC. ALL RIGHTS RESERVED. REPRODUCTION OR USE OF THE CONTENTS OF THIS DOCUMENT, ADVITHOUT THE EXPRESS WRITTEN PERMISSION OF W.K. DICKSON & CO., INC. IS PROHIBITED. ANY UNAUTHORIZED REUSE OF THESE PLANS WILL BE CONSIDERED TO BE WILD, RECKLESS AND CRIMINAL IN NATURE. THESE PLANS ARE NOT TO BE USED FOR ANY PURPOSE OTHER THAN THAT FOR WHICH THEY WERE PREPARED AND ARE NOT TO BE ASSIGNED TO ANY THIRD PARTY WITHOUT THE EXPRESS WRITTEN CONSENT OF W.K. DICKSON & CO., INC. ANY REUSE OF THESE PLANS FOR OTHER PROJECTS OR EXTENSIONS OF THIS PROJECT OR ANY OTHER PROJECT WITHOUT THE EXPRESS WRITTEN CONSENT OF W.K. DICKSON & CO., INC. SHALL BE AT THE USER'S SOLE RISK AND WITHOUT LIABILITY TO W.K. DICKSON & CO., INC. AND THE USER SHALL INDEMNIFY AND HOLD HARMLESS W.K. DICKSON & CO., INC. FROM ALL CLAIMS, DAMAGES, LOSSES AND EXPENSES ARISING OUT OF OR RESULTING THEREFROM. ANY MODIFICATION OF THESE PLANS MUST BE FILED WITH W.K. DICKSON & CO., INC. FOR REVIEW AND APPROVAL. IF ANY PORTION OF THIS AGREEMENT IS HELD INVALID, THE REMAINDER OF THIS AGREEMENT SHALL REMAIN IN FULL FORCE AND EFFECT. THESE RESTRICTIONS SHALL BE GOVERNED BY THE LAWS OF THE STATE OF SOUTH CAROLINA. ANY ELECTRONIC COPY OF THESE PLANS OR ANY COPY WITHOUT THE ORIGINAL SIGNATURE AND SEAL SHALL BE CONSIDERED TO BE VOID. THESE CONDITIONS APPLY TO THE ORIGINAL OF THIS DOCUMENT AND ANY ELECTRONIC COPIES OR PRINTED REPRODUCTIONS.

NOW OR FORMERLY
BRADLEY & JACQUELINE FLETCHER
DB 6729 PG 049
PIN # 06090052
ZONING: RCD

NOW OR FORMERLY
DAVID & ELLEN AUBEL
DB 6700 PG 440
PIN # 06090053
ZONING: RCD

NOW OR FORMERLY
LUANNE & EDWARD DAY
DB 6612 PG 034
PIN # 06090054
ZONING: RCD

NOW OR FORMERLY
CAMILO & MARGARITA GUZMAN
DB 6686 PG 830
PIN # 06090055
ZONING: RCD

NOW OR FORMERLY
DANNON & AMY TEDJA
DB 6687 PG 075
PIN # 06090056
ZONING: RCD

NOW OR FORMERLY
CLIFFORD & JULIE CLIFFORD
DB 6706 PG 483
PIN # 06090057
ZONING: RCD

NOW OR FORMERLY
STANDARD PACIFIC OF THE CAROLINAS
DB 6459 PG 414
PIN # 06090060
ZONING: RCD

NOW OR FORMERLY
ROSIE & MARK RUSSO
DB 6768 PG 316
PIN # 06090058
ZONING: RCD

NOW OR FORMERLY
ROBERY ALLEN & ALLISON BUSBY
DB 6771 PG 022
PIN # 06090059
ZONING: RCD

NOW OR FORMERLY
STANDARD PACIFIC OF THE CAROLINAS
DB 6459 PG 414
PIN # 06090092
ZONING: RCD

STILLWELL DRIVE (≈50' PUBLIC R/W)

PECAN RIDGE COURT (≈50' PUBLIC R/W)

ARBORBROOK AVENUE (50' PUBLIC R/W)

EXISTING BOUNDARY (TYP.)

20' PROPOSED STORM DRAINAGE EASEMENT (TYP.)

PROPOSED SETBACK (TYP.)

PROPOSED LOT LINE (TYP.)

EXISTING WETLANDS (TYP.)

CENTERLINE OF STREAM

DIVERSION DITCH DD#1

DIVERSION DITCH DD#2

DIVERSION DITCH DD#5

DIVERSION DITCH DD#6

DIVERSION DITCH DD#7

DIVERSION BERM WITH EROSION CONTROL MATTING

LOT 21 FLOOD PROTECTION ELEVATION: 720'

LOT 20 FLOOD PROTECTION ELEVATION: 720'

LOT 17 FLOOD PROTECTION ELEVATION: 704'

LOT 17 FLOOD PROTECTION ELEVATION: 702'

18 71,699.20 SF 1.65 AC
19 40,800.97 SF 0.94 AC
20 40,165.59 SF 0.92 AC
21 40,604.66 SF 0.93 AC
22 40,006.35 SF 0.92 AC
23 40,097.65 SF 0.92 AC
24 40,044.64 SF 0.92 AC
17 40,876.83 SF 0.94 AC
16 46,606.64 SF 1.07 AC
13 41,785.15 SF 0.96 AC
14 43,043.59 SF 0.99 AC
15 49,898.47 SF 1.15 AC
12 40,151.94 SF 0.92 AC
11 42,276.84 SF 0.97 AC
10 50,121.10 SF 1.15 AC
9 48,063.14 SF 1.10 AC

DETENTION POND #1

DETENTION POND #2

MIN. 1% BOTTOM SLOPE

PROPOSED EMERGENCY SPILLWAY

CONTRACTOR SHALL FILL IN AREA WITH EXCESS CUT MATERIAL FROM THE SITE

PROPOSED RIP-RAP APRON (TYP.)

COS-2
346,526.61 SF
7.96 AC

24" RCP SD LINE POND 2 OUTFALL

30" RCP SD LINE POND 1 OUTFALL

18" RCP SD LINE H

24" RCP SD LINE H

18" RCP SD LINE E

24" RCP SD LINE D

18" RCP SD LINE F

18" RCP SD LINE B

30" RCP SD LINE D

42" RCP SD LINE I

30" RCP SD LINE A

CB-H5
CB-H6
CB-H4
CB-E1
CB-D5
CB-F1
CB-D4
CB-B1
CB-B2
JB-H3
JB-H2
JB-H1A
JB-A2
DI-H7
DI-D2
DI-A3
HW-H2
HW-I1
HW-H1
HW-E2
HW-F2
HW-D1
HW-A1
HW-1
HW-2
BMP-1
BMP-2

EXISTING BOUNDARY (TYP.)

GRAPHIC SCALE
60 0 30 60 120 240
(IN FEET)
1 inch = 60 ft.

WK DICKSON
community infrastructure consultants

WK DICKSON
community infrastructure consultants
1320 MAIN STREET
SUITE 400
COLUMBIA, SC 29201
(t)803-786-4261
(f)803-786-4263
WWW.WKDICKSON.COM

NORTH CAROLINA PROFESSIONAL ENGINEER BRIAN E. THOMAS 033121 6/28/17

PROFESSIONAL SEAL

NO.	DATE	DESCRIPTION	BY
1	4/24/17	REVISED PER COMMENTS FROM NCDOT, TOWN OF WEDDINGTON, UCPW, & NCDEQ	JEB
2	6/6/17	REVISED PER COMMENTS FROM NCDOT, TOWN OF WEDDINGTON, UCPW, & NCDEQ	TAK
3	6/20/17	REVISED PER COMMENTS FROM TOWN OF WEDDINGTON	WGB
4	6/28/17	REVISED PER COMMENTS FROM NCDOT	TAK

REVISION RECORD

PRELIMINARY DESIGN - NOT RELEASED FOR CONSTRUCTION, RECORDATION, CONVEYANCES, OR SALES

PROJECT NAME:
GRAHAM ALLEN SUBDIVISION
TOWN OF WEDDINGTON, SANDY RIDGE TOWNSHIP, UNION COUNTY, NC

DRAWING TITLE:
GRADING AND DRAINAGE PLAN - SHEET 2

PROJ. MGR.:	BET
DESIGN BY:	MDJ
DRAWN BY:	MDJ
PROJ. DATE:	OCT. 2016

DRAWING NUMBER:
4.2

WKD PROJ. NO.:
20160191.00.CL

North Carolina 811 www.nc811.org

R:\Active Projects\Current Imaging 8.5\20160191XXCL - Graham Allen Subdivision Redesign Civil\CAD\DWG\Sheets\4.2 GRDG PLAN.dwg, WGOLES, 6/28/2017 10:29:57 AM

COPYRIGHT © W.K. DICKSON & CO., INC. ALL RIGHTS RESERVED. REPRODUCTION OR USE OF THE CONTENTS OF THIS DOCUMENT, ADVITIONS OR MODIFICATIONS TO THE CONTENTS OF THIS DOCUMENT BY ANY METHOD WITHOUT THE EXPRESS WRITTEN CONSENT OF W.K. DICKSON & CO., INC. IS PROHIBITED. ANY UNAUTHORIZED USE, ADDITIONS OR MODIFICATIONS TO THE CONTENTS OF THIS DOCUMENT, OR ANY REPRODUCTION FROM IT, WILL BE AT USER'S SOLE RISK AND WITHOUT LIABILITY TO W.K. DICKSON & CO., INC. AND USER AGREES TO INDEMNIFY W.K. DICKSON & CO., INC. FROM ANY CLAIMS, LOSS OR EXPENSE RESULTING THEREFROM. ELECTRONIC FILES ARE NOT CONSIDERED TO BE VALID. TRUE COPIES FROM THE ORIGINAL OF THIS DOCUMENT MARKED WITH AN ORIGINAL SIGNATURE AND SEAL SHALL BE CONSIDERED TO BE VALID.

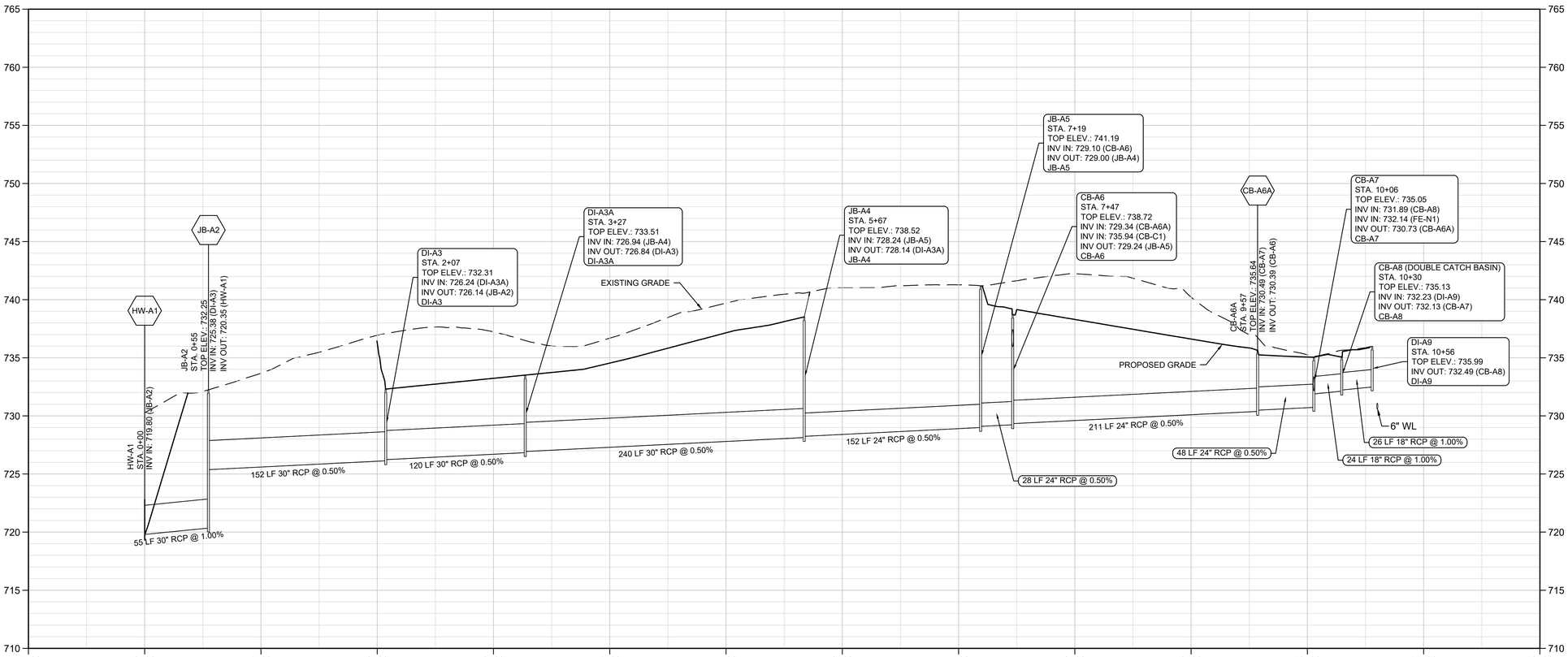

SD LINE A

SCALE: 1" = 50' HORIZONTAL
1" = 5' VERTICAL

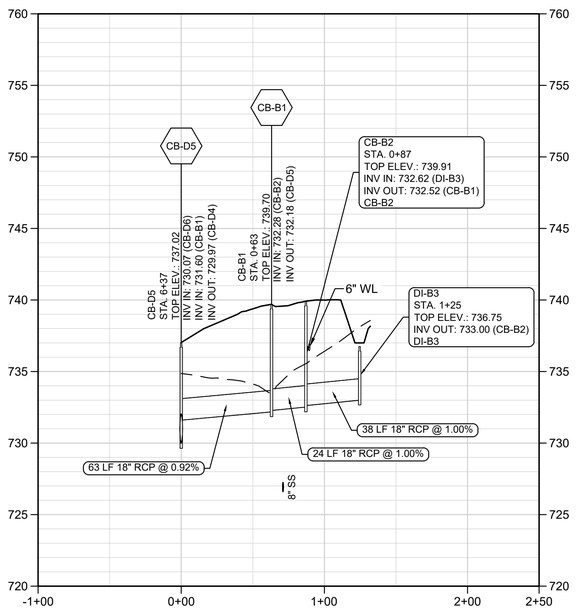

SD LINE B

SCALE: 1" = 50' HORIZONTAL
1" = 5' VERTICAL

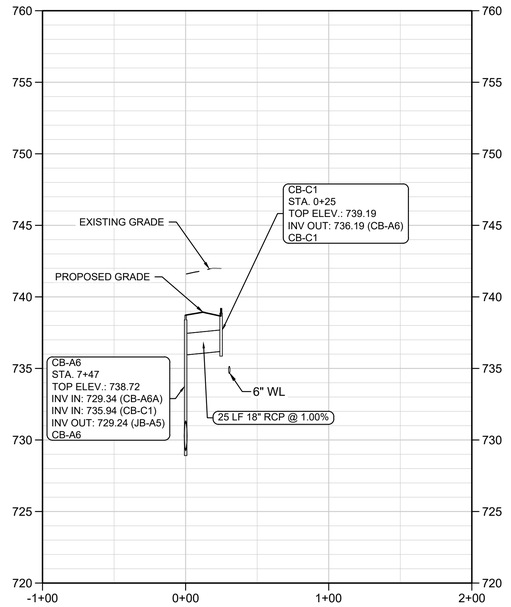

SD LINE C

SCALE: 1" = 50' HORIZONTAL
1" = 5' VERTICAL

NOTES:
1. ALL PIPE LENGTHS ARE TO CENTER OF STRUCTURE.
2. ALL CATCH BASIN TOP ELEVATIONS ARE SET TO TOP OF HOOD AT TOP CURB ELEVATION ALONG ROADWAYS.

PRELIMINARY DESIGN - NOT RELEASED FOR CONSTRUCTION, RECORDATION, CONVEYANCES, OR SALES

WK DICKSON
community infrastructure consultants

1320 MAIN STREET
SUITE 400
COLUMBIA, SC 29201
(t)803-786-4261
(f)803-786-4263

WWW.WKDICKSON.COM

NORTH CAROLINA PROFESSIONAL ENGINEER SEAL 033121 BRIAN E. THOMAS 4/28/17

PROFESSIONAL SEAL

REVISION RECORD

NO.	DATE	DESCRIPTION	BY
1.	4/24/17	REVISED PER COMMENTS FROM NCDOT, TOWN OF WEDDINGTON, UCPW, & NCDEQ	JEB
2.	6/6/17	REVISED PER COMMENTS FROM NCDOT, TOWN OF WEDDINGTON, UCPW, & NCDEQ	TAK
3.	6/20/17	REVISED PER COMMENTS FROM TOWN OF WEDDINGTON	WGB
4.	6/28/17	REVISED PER COMMENTS FROM NCDOT	TAK

PROJECT NAME:
GRAHAM ALLEN SUBDIVISION
TOWN OF WEDDINGTON, SANDY RIDGE TOWNSHIP, UNION COUNTY, NC

DRAWING TITLE:
STORM DRAINAGE PROFILES - SHEET 1

PROJ. MGR.:	BET
DESIGN BY:	MDJ
DRAWN BY:	MDJ
PROJ. DATE:	OCT. 2016

DRAWING NUMBER:
4.3

WKD PROJ. NO.:
20160191.00.CL

P:\Active Projects\Current Working Dir (SDW)\WKDO_ Graham Allen Subdivision Redesign Ctrl\CAD\Civil3D\Sheets\4.3 ST PROFILES.dwg, 4/28/2017 11:37:07 AM

COPYRIGHT © W.K. DICKSON & CO., INC. ALL RIGHTS RESERVED. REPRODUCTION OR USE OF THE CONTENTS OF THIS DOCUMENT, ADVITORIAL OR OTHERWISE, IN ANY FORM BY ANY MEANS, IN WHOLE OR IN PART, IS PROHIBITED WITHOUT THE PRIOR WRITTEN CONSENT OF W.K. DICKSON & CO., INC. ANY UNAUTHORIZED REUSE OF THIS DOCUMENT SHALL BE AT THE USER'S SOLE RISK AND WITHOUT LIABILITY TO W.K. DICKSON & CO., INC. AND THE USER SHALL INDEMNIFY AND HOLD W.K. DICKSON & CO., INC. HARMLESS FROM ALL CLAIMS, DAMAGES, LOSSES AND EXPENSES ARISING OUT OF OR RESULTING THEREFROM. ANY REUSE OF THIS DOCUMENT SHALL BE AT THE USER'S SOLE RISK AND WITHOUT LIABILITY TO W.K. DICKSON & CO., INC. AND THE USER SHALL INDEMNIFY AND HOLD W.K. DICKSON & CO., INC. HARMLESS FROM ALL CLAIMS, DAMAGES, LOSSES AND EXPENSES ARISING OUT OF OR RESULTING THEREFROM. ANY REUSE OF THIS DOCUMENT WITHOUT WRITTEN VERIFICATION OR ADAPTATION BY W.K. DICKSON & CO., INC. FOR THE SPECIFIC PURPOSE INTENDED WILL BE AT USER'S SOLE RISK AND WITHOUT LIABILITY OR LEGAL EXPOSURE TO W.K. DICKSON & CO., INC. AND USER SHALL INDEMNIFY AND HOLD W.K. DICKSON & CO., INC. HARMLESS FROM ALL CLAIMS, DAMAGES, LOSSES AND EXPENSES ARISING OUT OF OR RESULTING THEREFROM. ANY REUSE OF THIS DOCUMENT SHALL BE CONSIDERED TO BE NULL AND VOID.

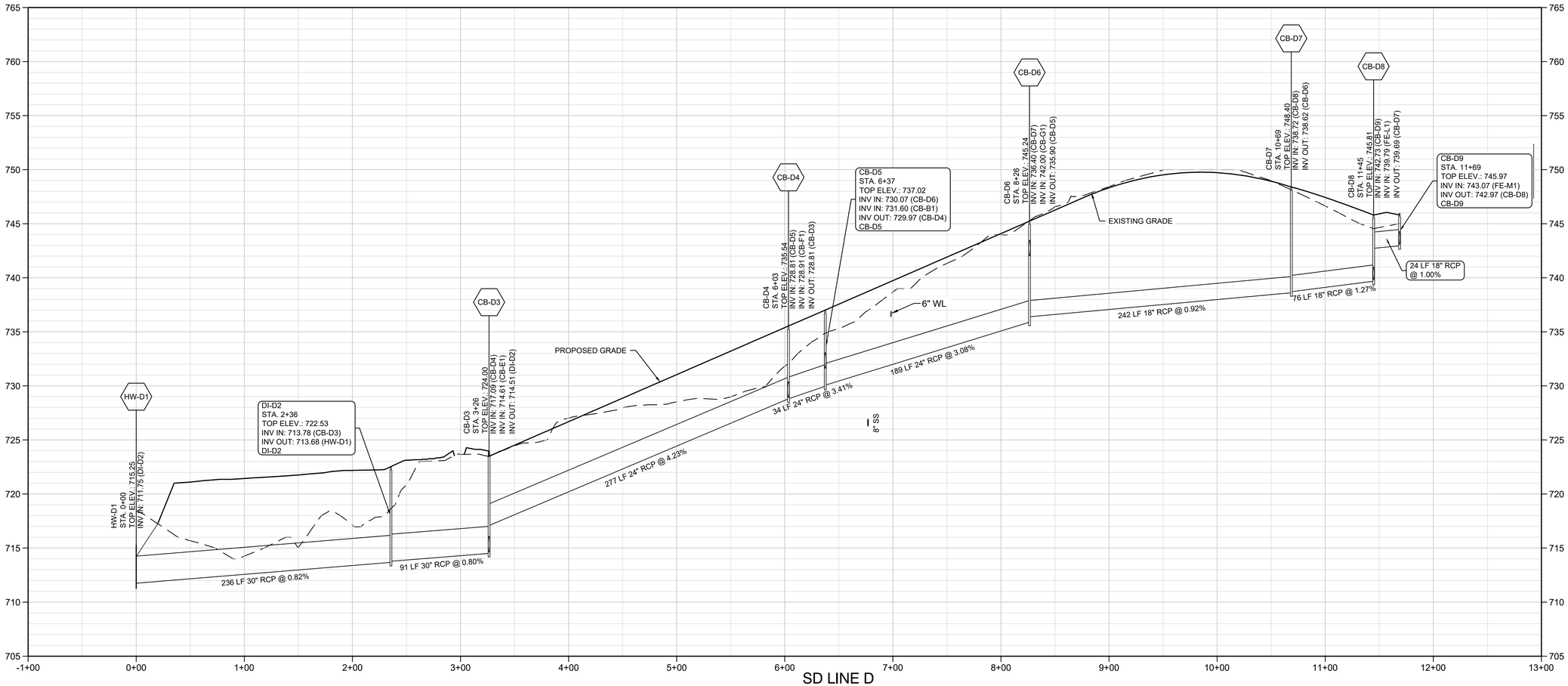

SD LINE D

SCALE: 1" = 50' HORIZONTAL
1" = 5' VERTICAL

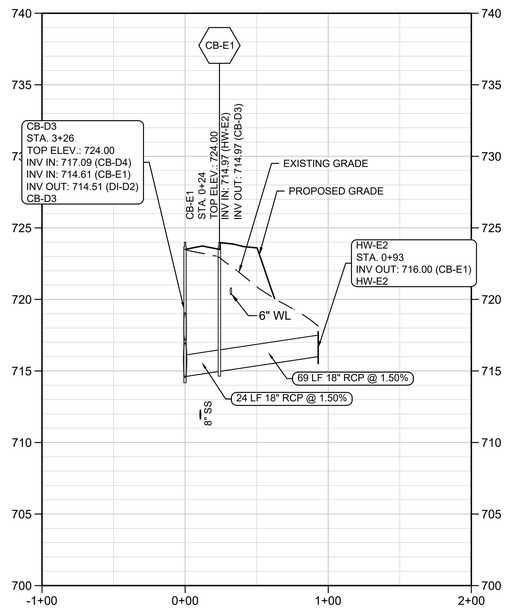

SD LINE E

SCALE: 1" = 50' HORIZONTAL
1" = 5' VERTICAL

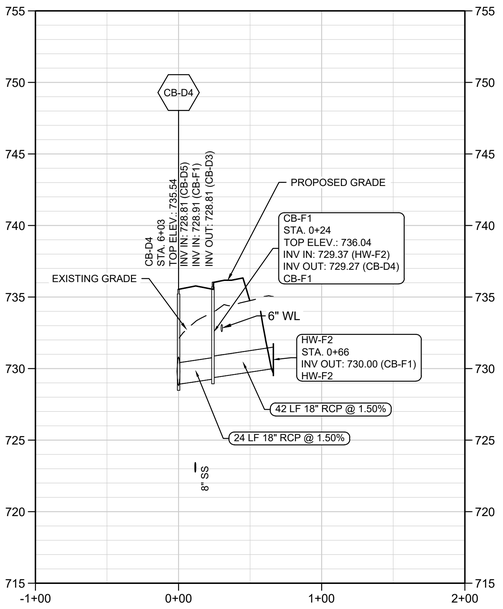

SD LINE F

SCALE: 1" = 50' HORIZONTAL
1" = 5' VERTICAL

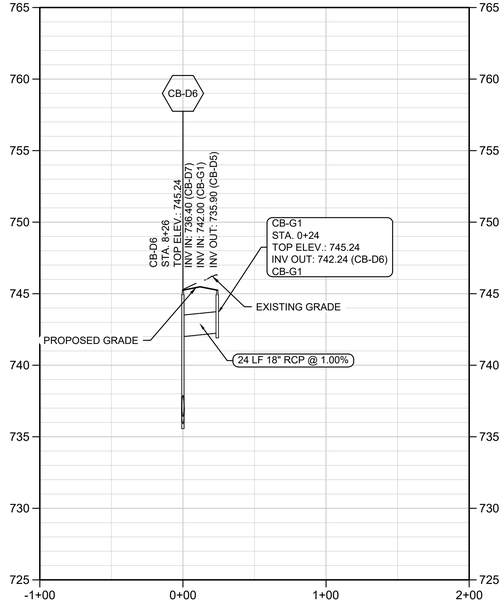

SD LINE G

SCALE: 1" = 50' HORIZONTAL
1" = 5' VERTICAL

NOTES:
1. ALL PIPE LENGTHS ARE TO CENTER OF STRUCTURE.
2. ALL CATCH BASIN TOP ELEVATIONS ARE SET TO TOP OF HOOD AT TOP CURB ELEVATION ALONG ROADWAYS.

PRELIMINARY DESIGN - NOT RELEASED FOR CONSTRUCTION, RECORDATION, CONVEYANCES, OR SALES

WK DICKSON
community infrastructure consultants

1320 MAIN STREET
SUITE 400
COLUMBIA, SC 29201
(t)803-786-4261
(f)803-786-4263

WWW.WKDICKSON.COM

NORTH CAROLINA PROFESSIONAL ENGINEER SEAL 033121 BRIAN E. THOMAS 6/28/17

PROFESSIONAL SEAL

REVISION RECORD

NO.	DATE	DESCRIPTION	BY
1.	4/24/17	REVISED PER COMMENTS FROM NCDOT, TOWN OF WEDDINGTON, UCPW, & NCDEQ	JEB
2.	6/6/17	REVISED PER COMMENTS FROM NCDOT, TOWN OF WEDDINGTON, UCPW, & NCDEQ	TAK
3.	6/20/17	REVISED PER COMMENTS FROM TOWN OF WEDDINGTON	WGB
4.	6/28/17	REVISED PER COMMENTS FROM NCDOT	TAK

PROJECT NAME:
GRAHAM ALLEN SUBDIVISION
TOWN OF WEDDINGTON, SANDY RIDGE TOWNSHIP, UNION COUNTY, NC

DRAWING TITLE:
STORM DRAINAGE PROFILES - SHEET 2

PROJ. MGR.:	BET
DESIGN BY:	MDJ
DRAWN BY:	MDJ
PROJ. DATE:	OCT. 2016

DRAWING NUMBER:
4.4

WKD PROJ. NO.:
20160191.00.CL

R:\2016\191.00-Graham Allen Subdivision Redesign CDs\CAD\DWG\Sheets\4.4 SD PROFILES.dwg, 6/28/2017 10:27:03 AM

COPYRIGHT © W.K. DICKSON & CO., INC. ALL RIGHTS RESERVED. REPRODUCTION OR USE OF THE CONTENTS OF THIS DOCUMENT, ADVITORIA OR PARTIAL, WITHOUT THE EXPRESS WRITTEN PERMISSION OF W.K. DICKSON & CO., INC. IS PROHIBITED. ANY UNAUTHORIZED REUSE OF THIS DOCUMENT SHALL BE AT THE USER'S SOLE RISK AND WITHOUT LIABILITY TO THE CORPORATION. THIS DOCUMENT IS NOT VALID UNLESS IT BEARS THE ORIGINAL SIGNATURE AND SEAL OF THE ENGINEER. COPIES FROM THIS ORIGINAL OF THIS DOCUMENT MARKED WITH ANYTHING OTHER THAN ORIGINAL SIGNATURE AND SEAL SHALL BE CONSIDERED TO BE NULL AND VOID.

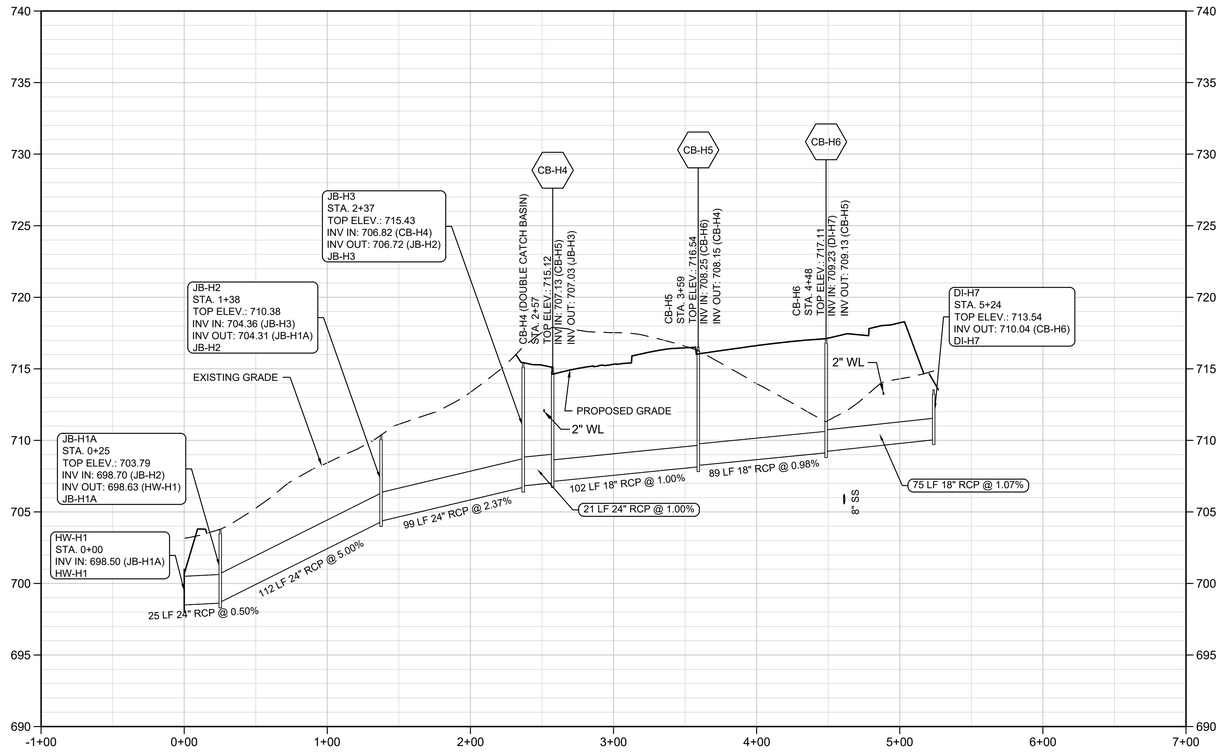

SD LINE H

SCALE: 1" = 50' HORIZONTAL
1" = 5' VERTICAL

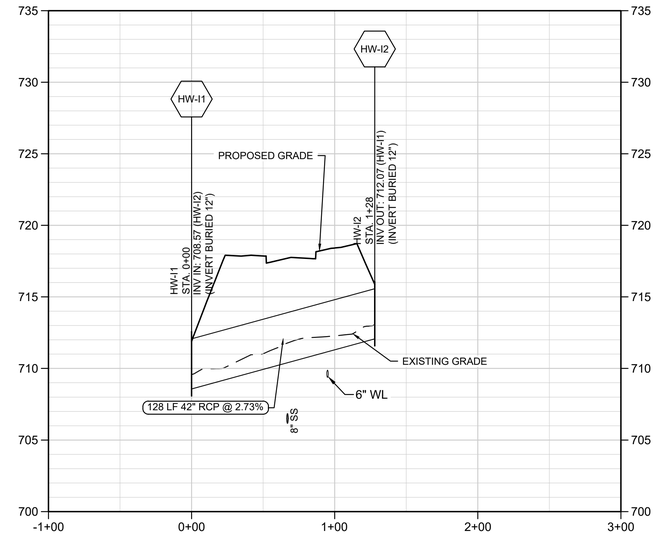

SD LINE I

SCALE: 1" = 50' HORIZONTAL
1" = 5' VERTICAL

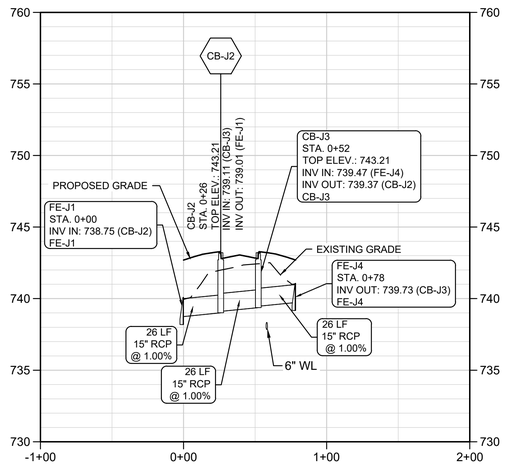

SD LINE J

SCALE: 1" = 50' HORIZONTAL
1" = 5' VERTICAL

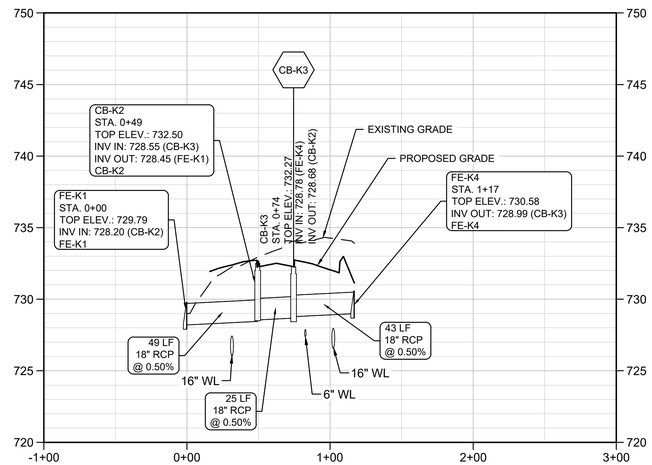

SD LINE K

SCALE: 1" = 50' HORIZONTAL
1" = 5' VERTICAL

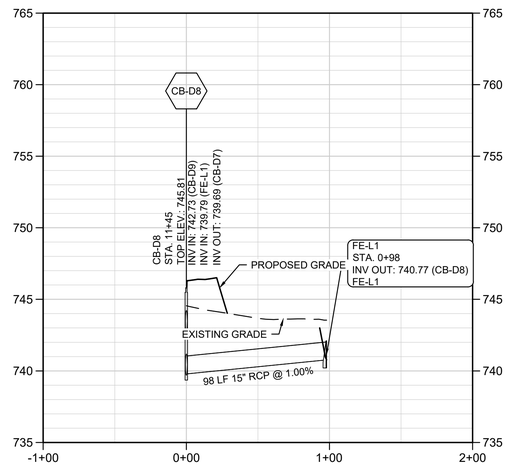

SD LINE L

SCALE: 1" = 50' HORIZONTAL
1" = 5' VERTICAL

NOTES:
1. ALL PIPE LENGTHS ARE TO CENTER OF STRUCTURE.
2. ALL CATCH BASIN TOP ELEVATIONS ARE SET TO TOP OF HOOD AT TOP CURB ELEVATION ALONG ROADWAYS.

PRELIMINARY DESIGN - NOT RELEASED FOR CONSTRUCTION, RECORDATION, CONVEYANCES, OR SALES

WK DICKSON
community infrastructure consultants

1320 MAIN STREET
SUITE 400
COLUMBIA, SC 29201
(t)803-786-4261
(f)803-786-4263

WWW.WKDICKSON.COM

NORTH CAROLINA PROFESSIONAL ENGINEER BRIAN E. THOMAS 033121 6/28/17

PROFESSIONAL SEAL

REVISION RECORD

NO.	DATE	DESCRIPTION	BY
1.	4/24/17	REVISED PER COMMENTS FROM NCDOT, TOWN OF WEDDINGTON, UCPW, & NCDEQ	JEB
2.	6/6/17	REVISED PER COMMENTS FROM NCDOT, TOWN OF WEDDINGTON, UCPW, & NCDEQ	TAK
3.	6/20/17	REVISED PER COMMENTS FROM TOWN OF WEDDINGTON	WGB
4.	6/28/17	REVISED PER COMMENTS FROM NCDOT	TAK

PROJECT NAME:
GRAHAM ALLEN SUBDIVISION
TOWN OF WEDDINGTON, SANDY RIDGE TOWNSHIP, UNION COUNTY, NC

DRAWING TITLE:
STORM DRAINAGE PROFILES - SHEET 3

PROJ. MGR.:	BET
DESIGN BY:	MDJ
DRAWN BY:	MDJ
PROJ. DATE:	OCT. 2016

DRAWING NUMBER:
4.5

WKD PROJ. NO.:
20160191.00.CL

P:\17x11\1 Projects\Current Working\20160191\00CL - Graham Allen Subdivision Redesign\Civil\CAD\Drawings\Sheets\3 SHEET PROFILES.dwg, 6/28/2017 10:27:09 AM

COPYRIGHT © W.K. DICKSON & CO., INC. ALL RIGHTS RESERVED. REPRODUCTION OR USE OF THE CONTENTS OF THIS DOCUMENT, ADDITIONS OR MODIFICATIONS TO THE CONTENTS OF THIS DOCUMENT, OR PREPARATION OF DERIVATIVE WORKS BASED ON THIS DOCUMENT, IN ANY FORM OR BY ANY MEANS, WITHOUT THE PRIOR WRITTEN PERMISSION OF W.K. DICKSON & CO., INC. IS STRICTLY PROHIBITED. ANY UNAUTHORIZED USE, REPRODUCTION OR PREPARATION OF DERIVATIVE WORKS WILL BE CONSIDERED TO BE WILFUL INFRINGEMENT. FROM THE ORIGINAL OF THIS DOCUMENT MARKED WITH AN ORIGINAL SIGNATURE AND SEAL, SHALL BE CONSIDERED TO BE WILFUL INFRINGEMENT.

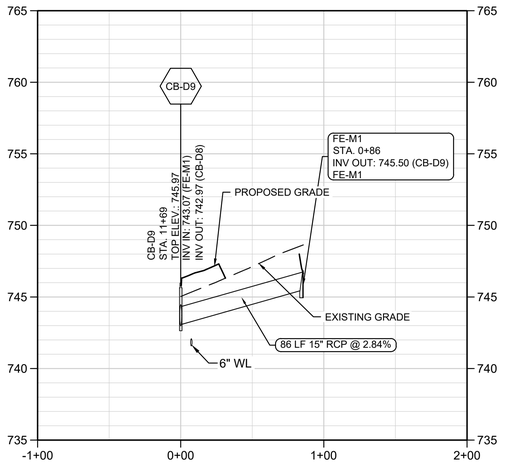

SD LINE M

SCALE: 1" = 50' HORIZONTAL
1" = 5' VERTICAL

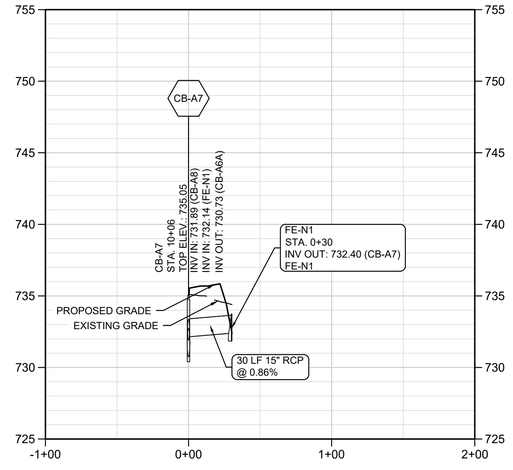

SD LINE N

SCALE: 1" = 50' HORIZONTAL
1" = 5' VERTICAL

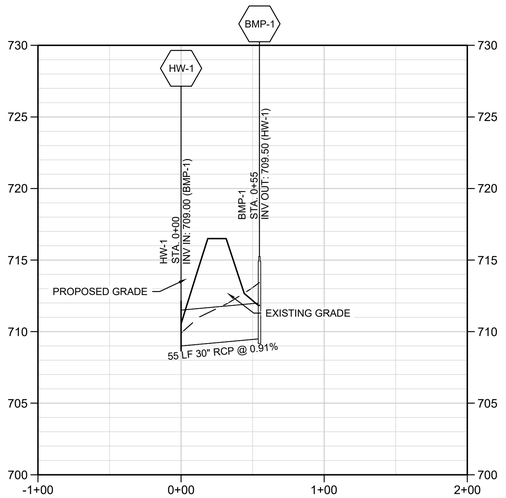

SD LINE POND 1 OUTFALL

SCALE: 1" = 50' HORIZONTAL
1" = 5' VERTICAL

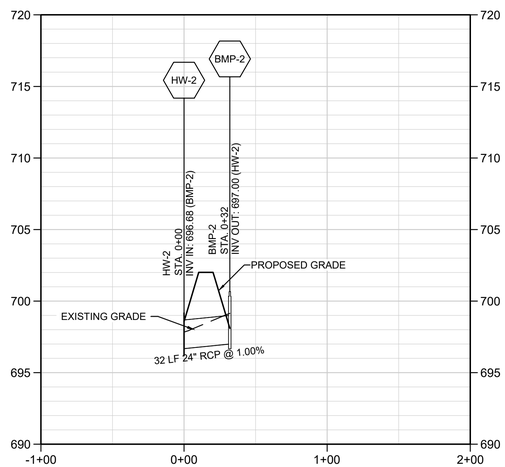

SD LINE POND 2 OUTFALL

SCALE: 1" = 50' HORIZONTAL
1" = 5' VERTICAL

NOTES:
1. ALL PIPE LENGTHS ARE TO CENTER OF STRUCTURE.
2. ALL CATCH BASIN TOP ELEVATIONS ARE SET TO TOP OF HOOD AT TOP CURB ELEVATION ALONG ROADWAYS.

PRELIMINARY DESIGN - NOT RELEASED FOR CONSTRUCTION, RECORDATION, CONVEYANCES, OR SALES

WK DICKSON
community infrastructure consultants

1320 MAIN STREET
SUITE 400
COLUMBIA, SC 29201
(t)803-786-4261
(f)803-786-4263

WWW.WKDICKSON.COM

NORTH CAROLINA PROFESSIONAL ENGINEER SEAL 033121 6/28/17 BRIAN E. THOMAS

PROFESSIONAL SEAL

REVISION RECORD

NO.	DATE	DESCRIPTION	BY
1.	4/24/17	REVISED PER COMMENTS FROM NCDOT, TOWN OF WEDDINGTON, UCPW, & NCDEQ	JEB
2.	6/6/17	REVISED PER COMMENTS FROM NCDOT, TOWN OF WEDDINGTON, UCPW, & NCDEQ	TAK
3.	6/20/17	REVISED PER COMMENTS FROM TOWN OF WEDDINGTON	WGB
4.	6/28/17	REVISED PER COMMENTS FROM NCDOT	TAK

PROJECT NAME:
GRAHAM ALLEN SUBDIVISION
TOWN OF WEDDINGTON, SANDY RIDGE TOWNSHIP, UNION COUNTY, NC

DRAWING TITLE:
STORM DRAINAGE PROFILES - SHEET 4

PROJ. MGR.:	BET
DESIGN BY:	MDJ
DRAWN BY:	MDJ
PROJ. DATE:	OCT. 2016

DRAWING NUMBER:
4.6

WKD PROJ. NO.:
20160191.00.CL

P:\2016\191 (Projects)\Land Hosting 63 (SR180 WOOD)_ Graham Allen Subdivision Redesign CDs\CAD\Civil3D\Sheets\4.3-4.5 SD PROFILES.dwg, 6/28/2017 11:39:23 AM

COPYRIGHT © W.K. DICKSON & CO., INC. ALL RIGHTS RESERVED. REPRODUCTION OR USE OF THE CONTENTS OF THIS DOCUMENT, ADVITORIA OR ANY PART THEREOF BY ANY METHOD OR PROCESS WITHOUT THE WRITTEN PERMISSION OF W.K. DICKSON & CO., INC. IS STRICTLY PROHIBITED. ANY UNAUTHORIZED REPRODUCTION OR USE OF THE CONTENTS OF THIS DOCUMENT, OR ANY PART THEREOF, WILL BE CONSIDERED AN INFRINGEMENT OF COPYRIGHT. ANY REPRODUCTION OF THIS DOCUMENT SHALL BE FREE FROM ANY ERRORS OR OMISSIONS AS COMPARED TO THE ORIGINAL SIGNATURE AND SEAL SHALL BE CONSIDERED TO BE NULL AND VOID.

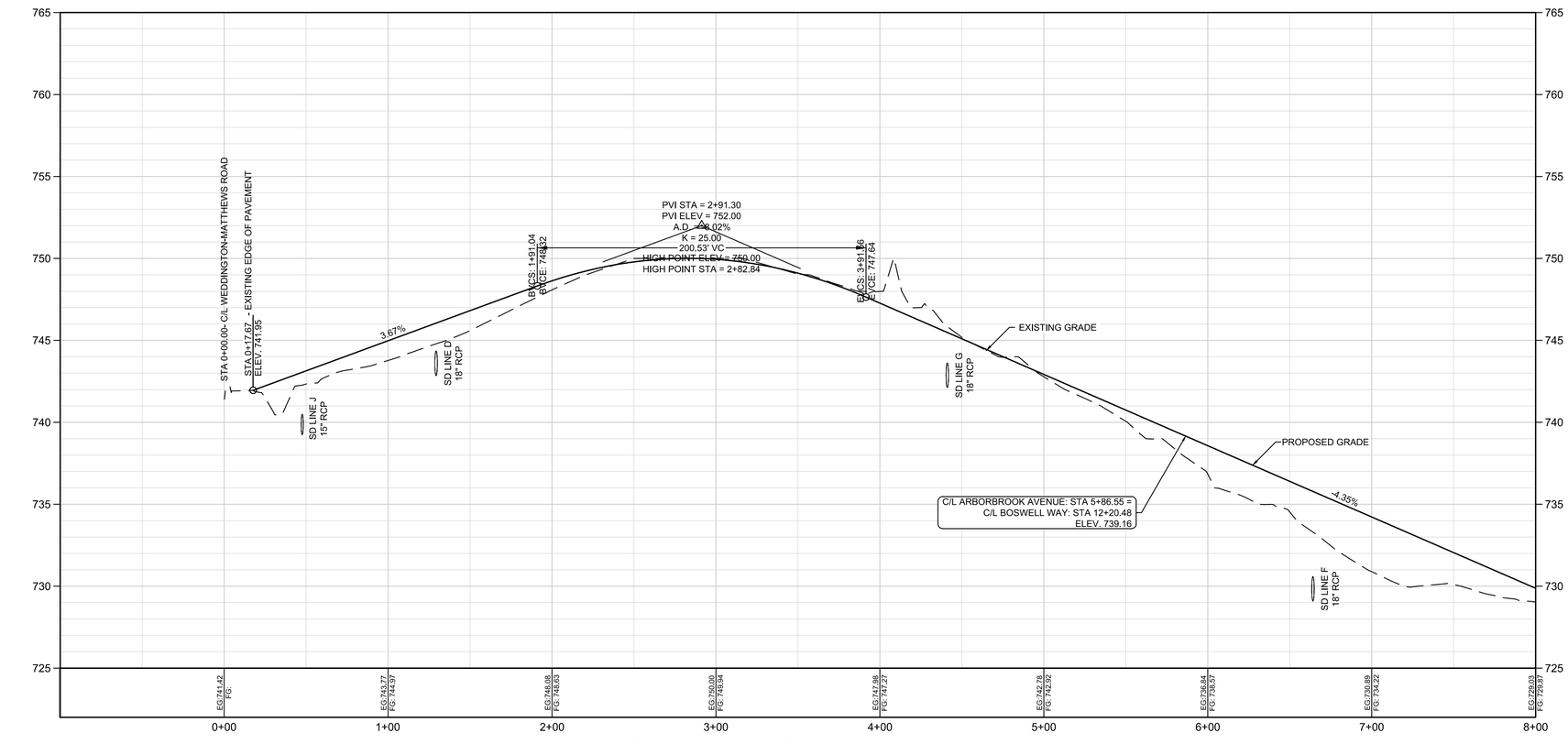

PROFILE - ARBORBROOK AVENUE STA. 0+00 TO 8+00

SCALE: 1" = 40' HORIZONTAL
1" = 4' VERTICAL

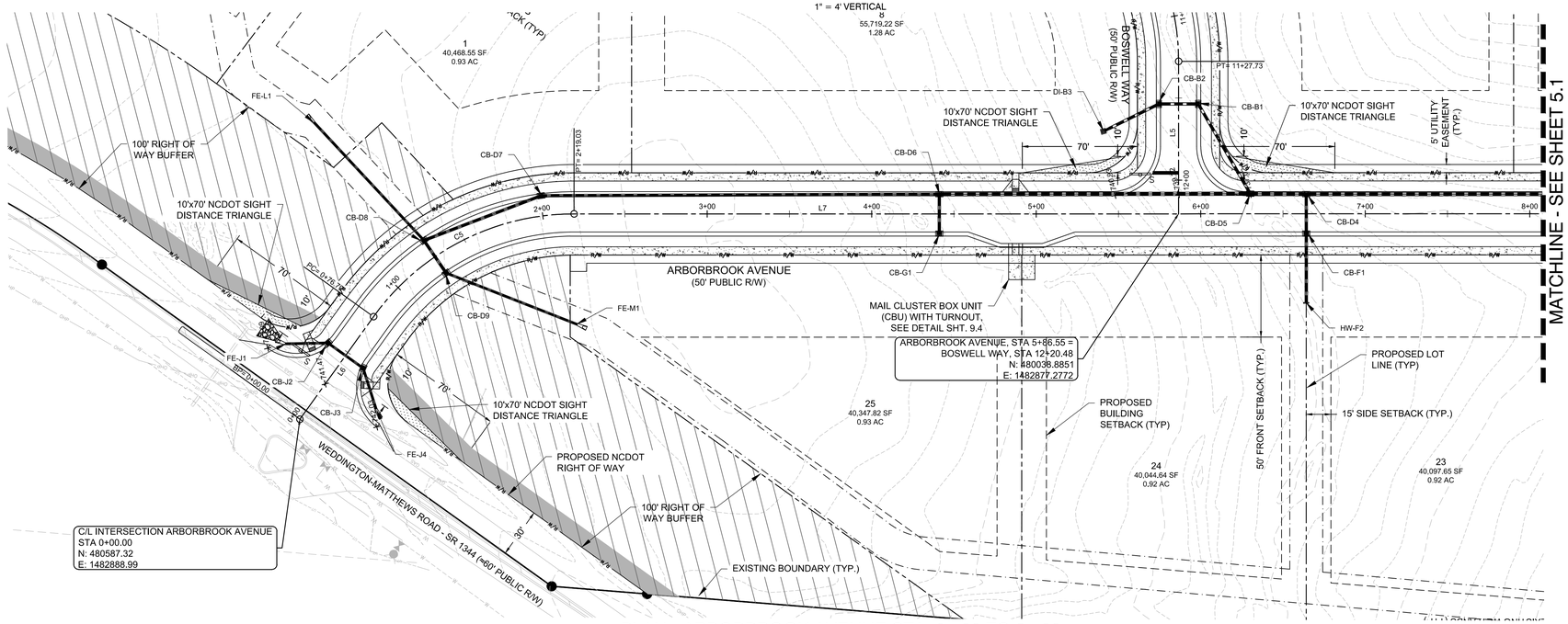

PLAN - ARBORBROOK AVENUE STA. 0+00 TO 8+00

SCALE: 1" = 40' HORIZONTAL

GRAPHIC SCALE
40 0 20 40 80 160
(IN FEET)
1 inch = 40 ft.

NOTES:
1. SEE SHEET 3.0 FOR ROADWAY STAKING LINE AND CURVE TABLE.
2. SEE SHEET 8.0 FOR GENERAL NOTES.

PRELIMINARY DESIGN - NOT RELEASED FOR CONSTRUCTION, RECORDATION, CONVEYANCES, OR SALES

WK DICKSON
community infrastructure consultants
1320 MAIN STREET
SUITE 400
COLUMBIA, SC 29201
(t)803-786-4261
(f)803-786-4263
WWW.WKDICKSON.COM

NORTH CAROLINA PROFESSIONAL ENGINEER SEAL 033121 BRIAN E. THOMAS
PROFESSIONAL SEAL

REVISION RECORD

NO	DATE	DESCRIPTION	BY
1.	4/24/17	REVISED PER COMMENTS FROM NCDOT, TOWN OF WEDDINGTON, UCPW, & NCDEQ	JEB
2.	6/6/17	REVISED PER COMMENTS FROM NCDOT, TOWN OF WEDDINGTON, UCPW, & NCDEQ	TAK
3.	6/20/17	REVISED PER COMMENTS FROM TOWN OF WEDDINGTON	WGB
4.	6/28/17	REVISED PER COMMENTS FROM NCDOT	TAK

PROJECT NAME:
GRAHAM ALLEN SUBDIVISION
TOWN OF WEDDINGTON, SANDY RIDGE TOWNSHIP, UNION COUNTY, NC

DRAWING TITLE:
ARBORBROOK AVE. - PLAN AND PROFILE

PROJ. MGR.:	BET
DESIGN BY:	MDJ
DRAWN BY:	MDJ
PROJ. DATE:	OCT. 2016

DRAWING NUMBER:
5.0
WKD PROJ. NO.:
20160191.00.CL

WK DICKSON
community infrastructure consultants

North Carolina 811 www.nc811.org

I:\Active\P Projects\Current Projects\20160191\00\DL_Graham Allen Subdivision Redesign (Oct)\2D\Sheets\5.0 PROFILE AND PLAN.dwg, ARBORBROOK, 6/28/2017 10:29:11 AM

COPYRIGHT © W.K. DICKSON & CO., INC. ALL RIGHTS RESERVED. REPRODUCTION OR USE OF THE CONTENTS OF THIS DOCUMENT, ADDITIONS OR DELETIONS TO THIS DOCUMENT, IN WHOLE OR IN PART, WITHOUT WRITTEN CONSENT OF W.K. DICKSON & CO., INC., IS PROHIBITED. ONLY COPIES FROM THE ORIGINAL OF THIS DOCUMENT MARKED WITH AN ORIGINAL SIGNATURE AND SEAL SHALL BE CONSIDERED TO BE VALID, TRUE COPIES.

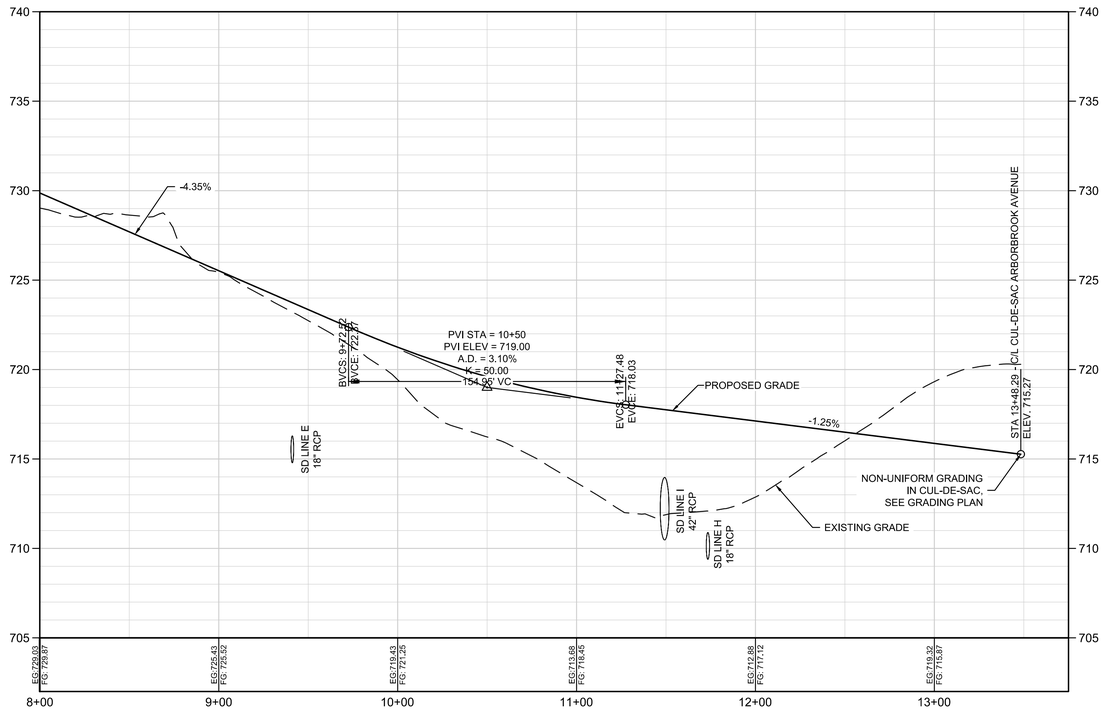

PROFILE - ARBORBROOK AVENUE STA. 8+00 TO 13+48.29

SCALE: 1" = 40' HORIZONTAL
1" = 4' VERTICAL

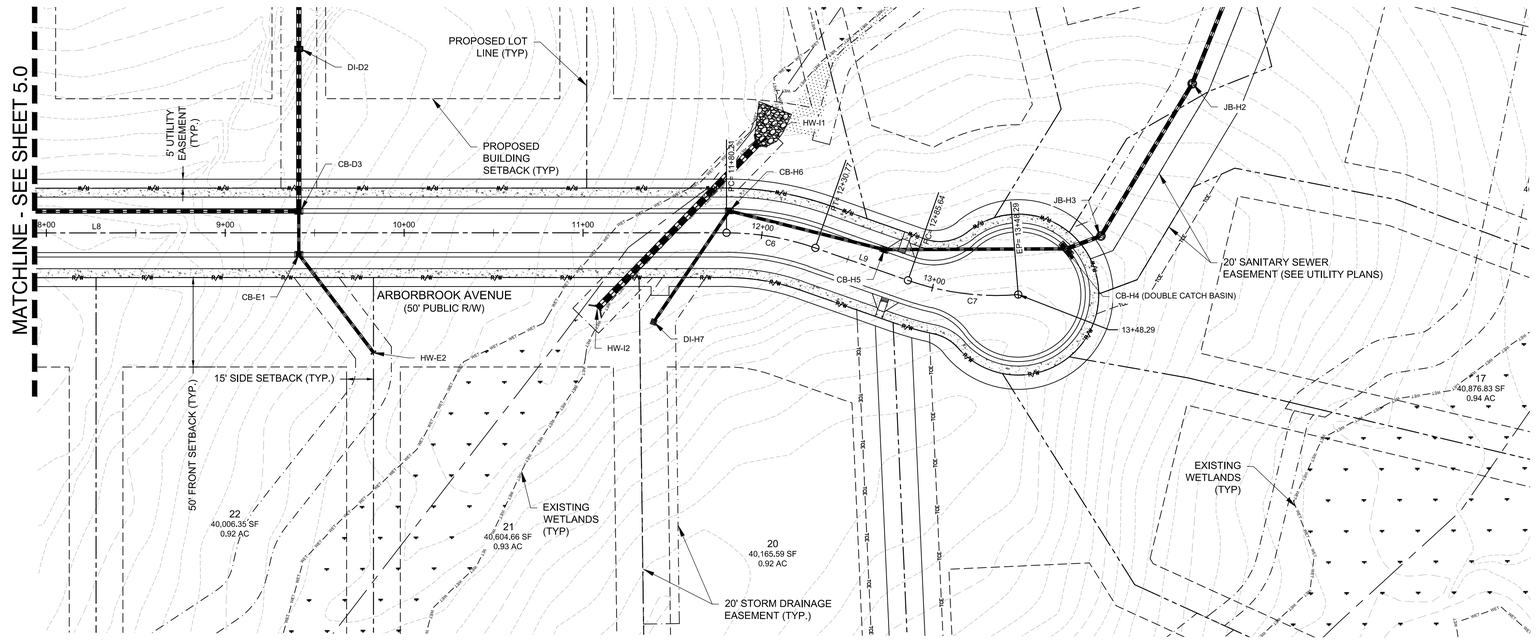

PLAN - ARBORBROOK AVENUE STA. 8+00 TO 13+48.29

SCALE: 1" = 40' HORIZONTAL

NOTES:

1. SEE SHEET 3.0 FOR ROADWAY STAKING LINE AND CURVE TABLE.
2. SEE SHEET 8.0 FOR GENERAL NOTES.

GRAPHIC SCALE

40 0 20 40 80 160

(IN FEET)
1 inch = 40 ft.

WK DICKSON
community infrastructure consultants

North Carolina 811
www.nc811.org

PRELIMINARY DESIGN - NOT RELEASED FOR CONSTRUCTION, RECORDATION, CONVEYANCES, OR SALES

WK DICKSON
community infrastructure consultants
1320 MAIN STREET
SUITE 400
COLUMBIA, SC 29201
(t)803-786-4261
(f)803-786-4263
WWW.WKDICKSON.COM

NORTH CAROLINA PROFESSIONAL SEAL 033121 ENGINEER BRIAN E. THOMAS 6/28/17

PROFESSIONAL SEAL

REVISION RECORD

NO.	DATE	DESCRIPTION	BY
1.	4/24/17	REVISED PER COMMENTS FROM NCDOT, TOWN OF WEDDINGTON, UCPW, & NCDEQ	JEB
2.	6/6/17	REVISED PER COMMENTS FROM NCDOT, TOWN OF WEDDINGTON, UCPW, & NCDEQ	TAK
3.	6/20/17	REVISED PER COMMENTS FROM TOWN OF WEDDINGTON	WGB
4.	6/28/17	REVISED PER COMMENTS FROM NCDOT	TAK

PROJECT NAME:
GRAHAM ALLEN SUBDIVISION
TOWN OF WEDDINGTON, SANDY RIDGE TOWNSHIP, UNION COUNTY, NC

DRAWING TITLE:
ARBORBROOK AVE. - PLAN AND PROFILE

PROJ. MGR.:	BET
DESIGN BY:	MDJ
DRAWN BY:	MDJ
PROJ. DATE:	OCT. 2016

DRAWING NUMBER:
5.1

WKD PROJ. NO.:
20160191.00.CL

COPYRIGHT © W.K. DICKSON & CO., INC. ALL RIGHTS RESERVED. REPRODUCTION OR USE OF THE CONTENTS OF THIS DOCUMENT, ADDITIONS OR MODIFICATIONS TO THE CONTENTS OF THIS DOCUMENT, OR ANY PORTION THEREOF, WITHOUT THE EXPRESS WRITTEN CONSENT OF W.K. DICKSON & CO., INC. IS PROHIBITED. ANY UNAUTHORIZED REPRODUCTION, ADDITIONS OR MODIFICATIONS WITHOUT THE EXPRESS WRITTEN CONSENT OF W.K. DICKSON & CO., INC. SHALL BE VOID AND ANY AND ALL RIGHTS AND PRIVILEGES GRANTED THEREBY SHALL IMMEDIATELY REVERT TO W.K. DICKSON & CO., INC. ANY REUSE OF THIS DOCUMENT OR PORTIONS THEREOF FOR ANY OTHER PROJECT OR EXTENSIONS OF THIS PROJECT, EXCEPT BY AGREEMENT IN WRITING AND APPROPRIATE COMPENSATION TO W.K. DICKSON & CO., INC., WILL BE UNLAWFUL. ANY PERSON OR ENTITY MAKING SUCH UNAUTHORIZED REUSE OF THIS DOCUMENT OR PORTIONS THEREOF WITHOUT THE PRIOR WRITTEN CONSENT OF W.K. DICKSON & CO., INC. SHALL BE DEEMED TO HAVE AGREED TO INDEMNIFY AND HOLD HARMLESS W.K. DICKSON & CO., INC. FROM ANY AND ALL LIABILITY, DAMAGES, LOSSES AND EXPENSES ARISING OUT OF OR RESULTING THEREFROM. ANY SUCH UNAUTHORIZED REUSE OR MODIFICATION WITHOUT WRITTEN VERIFICATION OR ADAPTATION BY W.K. DICKSON & CO., INC. FOR THE SPECIFIC PURPOSE INTENDED WILL BE AT USER'S SOLE RISK AND WITHOUT LIABILITY OR LEGAL EXPOSURE TO W.K. DICKSON & CO., INC. ALL PLANS, DRAWINGS, SPECIFICATIONS, AND COPIES THEREOF FURNISHED BY W.K. DICKSON & CO., INC. ARE AND SHALL REMAIN THE PROPERTY OF W.K. DICKSON & CO., INC. THEY ARE TO BE USED ONLY WITH RESPECT TO THIS PROJECT AND SHALL NOT BE LOANED, COPIED OR DISCLOSED TO ANYONE EXCEPT AS PROVIDED IN A WRITTEN AGREEMENT WITH W.K. DICKSON & CO., INC. WHEN THE RIGHT TO USE OR MODIFY IS GRANTED BY THE OWNER, THIS NOTICE SHALL NOT BE REMOVED. ANY REUSE OF THIS DOCUMENT WITHOUT AN ORIGINAL SIGNATURE AND SEAL SHALL BE CONSIDERED TO BE NULL AND VOID.

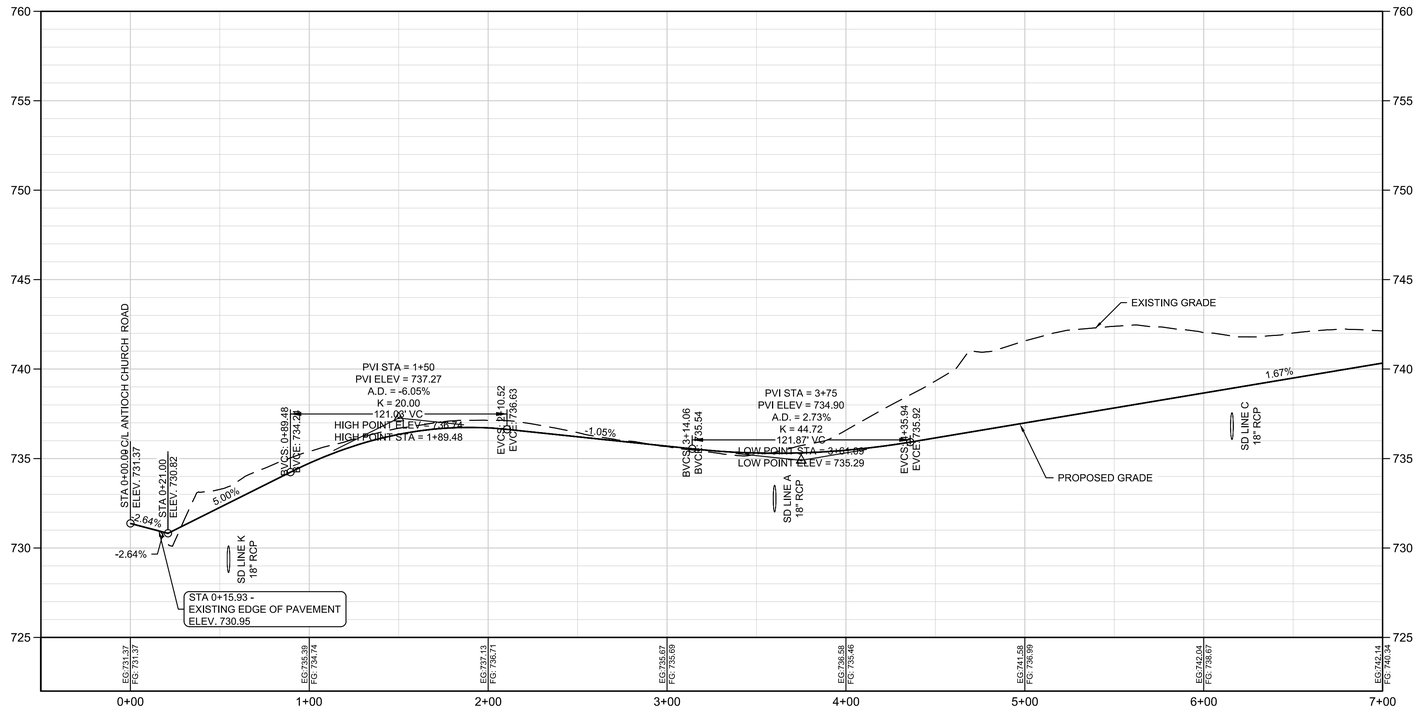

PROFILE - BOSWELL WAY STA. 0+00 TO 7+00

SCALE: 1" = 40' HORIZONTAL
1" = 4' VERTICAL

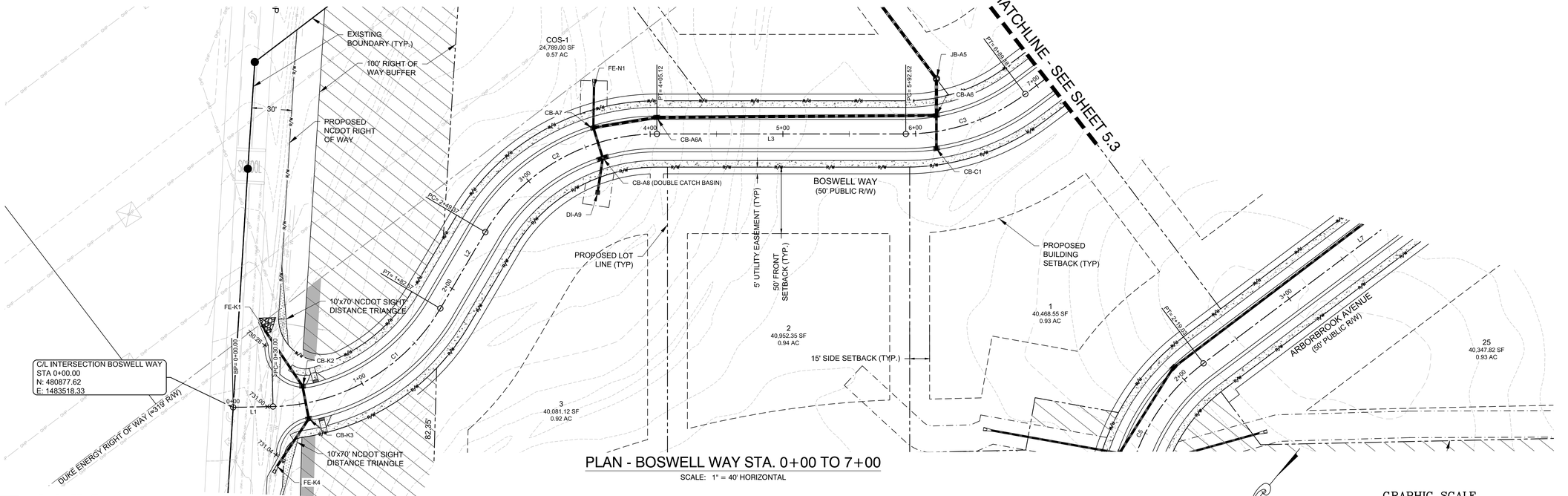

PLAN - BOSWELL WAY STA. 0+00 TO 7+00

SCALE: 1" = 40' HORIZONTAL

GRAPHIC SCALE
40 0 20 40 80 160
(IN FEET)
1 inch = 40 ft.

NOTES:
1. SEE SHEET 3.0 FOR ROADWAY STAKING LINE AND CURVE TABLE.
2. SEE SHEET 8.0 FOR GENERAL NOTES.

WK DICKSON
community infrastructure consultants
1320 MAIN STREET
SUITE 400
COLUMBIA, SC 29201
(t)803-786-4261
(f)803-786-4263
WWW.WKDICKSON.COM

NORTH CAROLINA PROFESSIONAL ENGINEER SEAL 033121 BRIAN E. THOMAS 6/28/17
PROFESSIONAL SEAL

REVISION RECORD

NO.	DATE	DESCRIPTION	BY
1	4/24/17	REVISED PER COMMENTS FROM NCDOT, TOWN OF WEDDINGTON, UCPW, & NCDEQ	JEB
2	6/6/17	REVISED PER COMMENTS FROM NCDOT, TOWN OF WEDDINGTON, UCPW, & NCDEQ	TAK
3	6/20/17	REVISED PER COMMENTS FROM TOWN OF WEDDINGTON	WGB
4	6/28/17	REVISED PER COMMENTS FROM NCDOT	TAK

PROJECT NAME:
GRAHAM ALLEN SUBDIVISION
TOWN OF WEDDINGTON, SANDY RIDGE TOWNSHIP, UNION COUNTY, NC

DRAWING TITLE:
BOSWELL WAY - PLAN AND PROFILE

PROJ. MGR.:	BET
DESIGN BY:	MDJ
DRAWN BY:	MDJ
PROJ. DATE:	OCT. 2016

DRAWING NUMBER:
5.2

WKD PROJ. NO.:
20160191.00.CL

PRELIMINARY DESIGN - NOT RELEASED FOR CONSTRUCTION, RECORDATION, CONVEYANCES, OR SALES

R:\2-PROJECTS\20160191.00 GRAHAM ALLEN SUBDIVISION - Graham Allen Subdivision Drawings\CIVIL\CAD\DWG\Sheets\5.2 BOSWELL WAY PROFILE.dwg, @5SHEET, 6/28/2017 10:29:41 AM

COPYRIGHT © W.K. DICKSON & CO., INC. ALL RIGHTS RESERVED. REPRODUCTION OR USE OF THE CONTENTS OF THIS DOCUMENT, ADVTORM OR OTHERWISE, WITHOUT THE EXPRESS WRITTEN PERMISSION OF W.K. DICKSON & CO., INC. IS PROHIBITED. ANY UNAUTHORIZED REPRODUCTION OR USE OF THE CONTENTS OF THIS DOCUMENT, WHETHER DIRECT OR INDIRECT, FROM THE ORIGINAL OR FROM DOCUMENT SCANNED WITH AN ORIGINAL SIGNATURE AND SEAL, SHALL BE CONSIDERED TO BE NULL AND VOID.

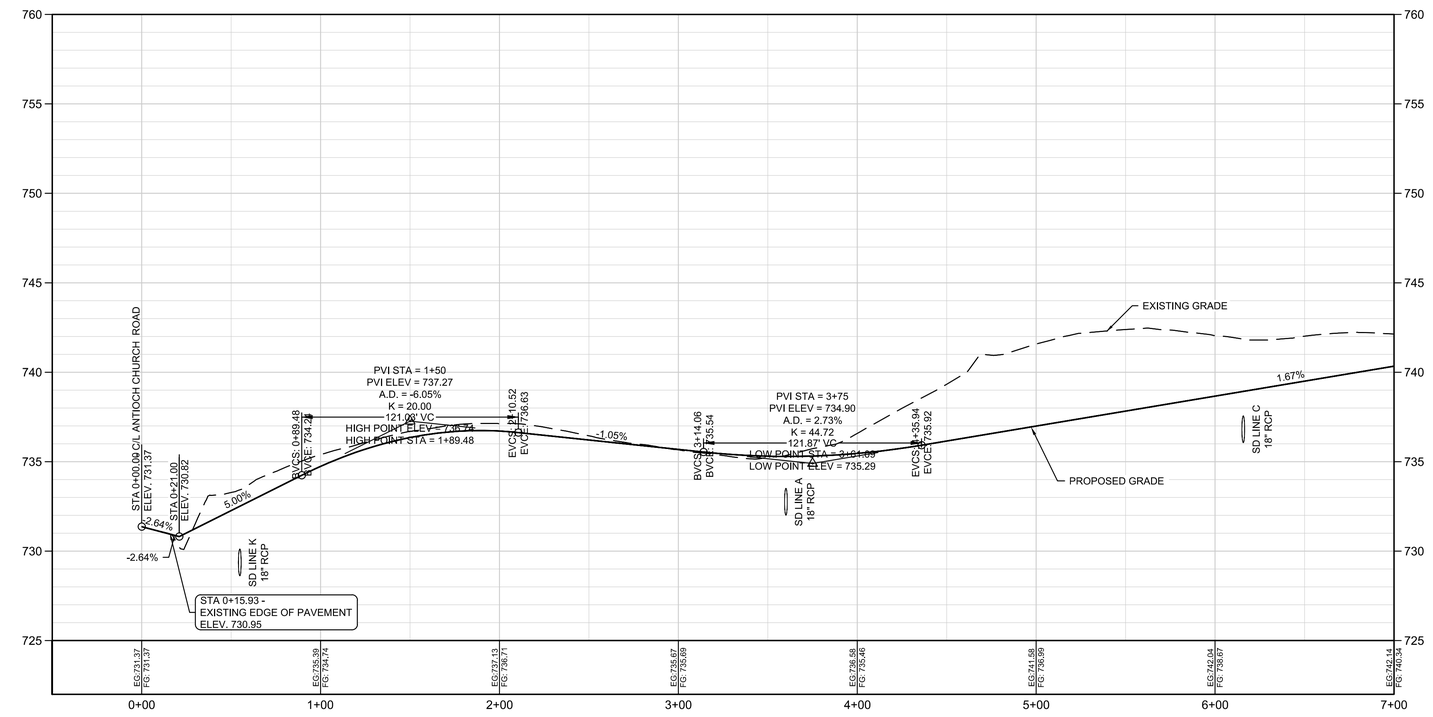

PROFILE - BOSWELL WAY STA. 7+00 TO 12+20.48

SCALE: 1" = 40' HORIZONTAL
1" = 4' VERTICAL

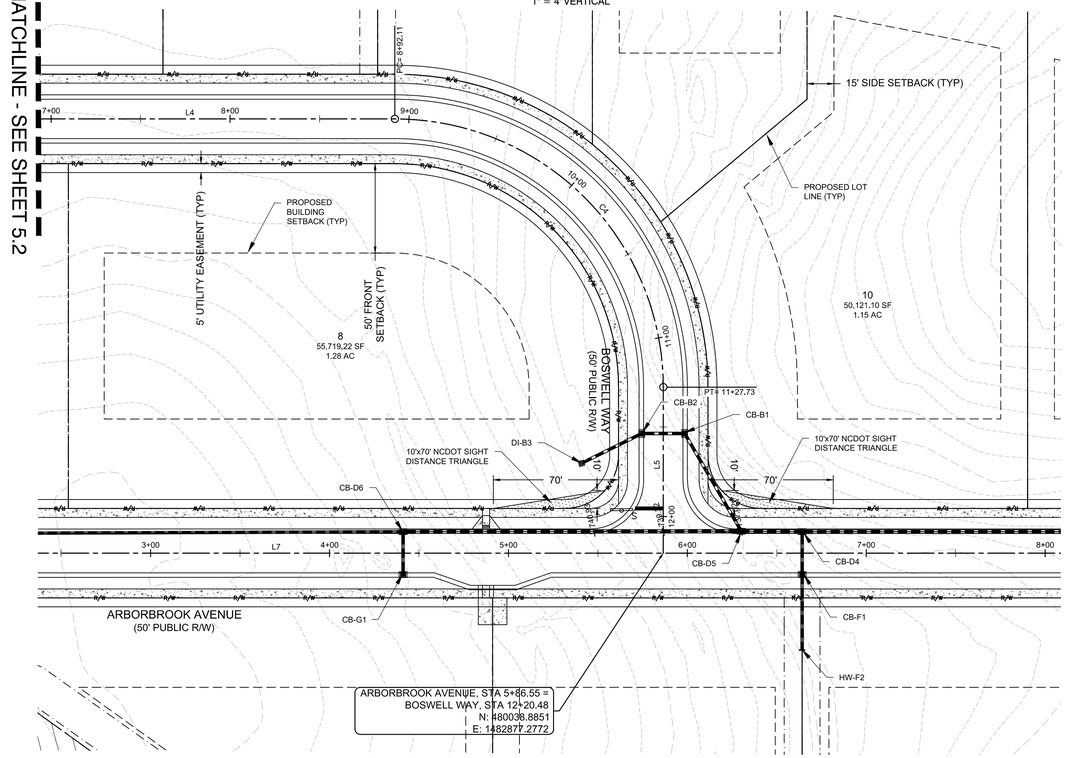

PLAN - BOSWELL WAY STA. 7+00 TO 12+20.78

SCALE: 1" = 40' HORIZONTAL

NOTES:

1. SEE SHEET 3.0 FOR ROADWAY STAKING LINE AND CURVE TABLE.
2. SEE SHEET 8.0 FOR GENERAL NOTES.

WK DICKSON
community infrastructure consultants

1320 MAIN STREET
SUITE 400
COLUMBIA, SC 29201
(t)803-786-4261
(f)803-786-4263

WWW.WKDICKSON.COM

NORTH CAROLINA PROFESSIONAL ENGINEER BRIAN E. THOMAS 033121 4/28/17

PROFESSIONAL SEAL

REVISION RECORD

NO.	DATE	DESCRIPTION	BY
1.	4/24/17	REVISED PER COMMENTS FROM NCDOT, TOWN OF WEDDINGTON, UCPW, & NCDEQ	JEB
2.	6/6/17	REVISED PER COMMENTS FROM NCDOT, TOWN OF WEDDINGTON, UCPW, & NCDEQ	TAK
3.	6/20/17	REVISED PER COMMENTS FROM TOWN OF WEDDINGTON	WGB
4.	6/28/17	REVISED PER COMMENTS FROM NCDOT	TAK

PROJECT NAME:
GRAHAM ALLEN SUBDIVISION
TOWN OF WEDDINGTON, SANDY RIDGE TOWNSHIP, UNION COUNTY, NC

DRAWING TITLE:
BOSWELL WAY - PLAN AND PROFILE

PROJ. MGR.:	BET
DESIGN BY:	MDJ
DRAWN BY:	MDJ
PROJ. DATE:	OCT. 2016

DRAWING NUMBER:
5.3

WKD PROJ. NO.:
20160191.00.CL

PRELIMINARY DESIGN - NOT RELEASED FOR CONSTRUCTION, RECORDATION, CONVEYANCES, OR SALES

GRAPHIC SCALE
40 0 20 40 80 160
(IN FEET)
1 inch = 40 ft.

North Carolina 811 www.nc811.org

WK DICKSON community infrastructure consultants

FILEPATH P:\Projects\Graham Allen Subdivision Redesign\CIVIL\CADD\Sheets\5.3 BOSWELL WAY PROFILE.dwg, @BRITISH, 6/28/2017 11:39:07 AM

COPYRIGHT © W.K. DICKSON & CO., INC. ALL RIGHTS RESERVED. REPRODUCTION OR USE OF THE CONTENTS OF THIS DOCUMENT, ADVTORM OR ELECTRONIC, WITHOUT THE EXPRESS WRITTEN PERMISSION OF W.K. DICKSON & CO., INC. IS PROHIBITED. ANY UNAUTHORIZED REUSE OF THE CONTENTS OF THIS DOCUMENT WILL BE AT THE USER'S SOLE RISK AND WITHOUT LIABILITY TO W.K. DICKSON & CO., INC. AND THE USER AGREES TO INDEMNIFY AND HOLD HARMLESS W.K. DICKSON & CO., INC. FROM ANY AND ALL LIABILITY ARISING FROM SUCH REUSE. THIS DOCUMENT IS THE PROPERTY OF W.K. DICKSON & CO., INC. AND IS NOT TO BE USED FOR ANY PURPOSE OTHER THAN THAT FOR WHICH IT IS SPECIFICALLY PREPARED. THIS DOCUMENT IS NOT TO BE CHANGED OR COPIED IN ANY FORM OR MANNER WHATSOEVER NOR ARE THEY TO BE ASSIGNED TO ANY THIRD PARTY WITHOUT FIRST OBTAINING THE EXPRESS WRITTEN PERMISSION AND CONSENT OF W.K. DICKSON & CO., INC. ANY REUSE OF THE DOCUMENTS FOR OTHER PROJECTS OR EXTENSIONS TO THIS PROJECT, OR ANY OTHER PROJECT WITHOUT WRITTEN VERIFICATION OR ADAPTATION BY W.K. DICKSON & CO., INC. WILL BE AT THE USER'S SOLE RISK AND WITHOUT LIABILITY TO W.K. DICKSON & CO., INC. AND THE USER AGREES TO INDEMNIFY AND HOLD HARMLESS W.K. DICKSON & CO., INC. FROM ANY AND ALL LIABILITY ARISING FROM SUCH REUSE. THE PROVISIONS OF THIS PARAGRAPH SHALL BE CONSIDERED TO BE MUTUAL IN NATURE.

FOR CONTINUATION SEE PLAN BELOW RIGHT

SEE SHEET 6.2

SEE SHEET 6.2

SEE SHEET 6.1

DRAINAGE AREA TO SEDIMENT BASIN 2 (PHASE I) OUTLET 4.99 AC.

EXISTING BOUNDARY (TYP.)

EXISTING WETLANDS (TYP.)

DRAINAGE AREA TO SEDIMENT BASIN 1 (PHASE I) OUTLET 15.65 AC.

BM-1

BM-2

BM-3

BM-4

ARBORBROOK AVENUE
(50' PUBLIC R/W)

BOSWELL WAY
(50' PUBLIC R/W)

WEDDINGTON-MATTHEWS ROAD - SR 1344 (~80' PUBLIC R/W)

100' RIGHT-OF-WAY BUFFER

SEDIMENT BASIN #2
MINIMUM DIMENSIONS:
LENGTH: 100 LF
WIDTH: 50 LF

SEDIMENT BASIN #1
MINIMUM DIMENSIONS:
LENGTH: 130 LF
WIDTH: 80 LF

DENUDED LIMITS
24.88 AC.

STILLWELL DRIVE
(~50' PUBLIC R/W)

PECAN RIDGE COURT
(~50' PUBLIC R/W)

ANTIOCH CHURCH ROAD - SR 1338
(~60' PUBLIC R/W)

DUKE ENERGY RIGHT OF WAY (≈319' R/W)

NOW OR FORMERLY
BRADLEY & JACQUELINE
DB 6729 PG 540
PIN # 06090052
ZONING: RCD

NOW OR FORMERLY
DAVID & ELLEN AUBEL
DB 6709 PG 440
PIN # 06090053
ZONING: RCD

NOW OR FORMERLY
LUANNE & EDWARD DAY
DB 6612 PG 034
PIN # 06090054
ZONING: RCD

NOW OR FORMERLY
CAMILO & MARGARITA GUZMAN
DB 6686 PG 830
PIN # 06090055
ZONING: RCD

NOW OR FORMERLY
DANNON & AMY TEDJA
DB 6687 PG 075
PIN # 06090056
ZONING: RCD

NOW OR FORMERLY
CLIFFORD & JULIE CLIFFORD
DB 6706 PG 483
PIN # 06090057
ZONING: RCD

NOW OR FORMERLY
ROBERT ALLEN & ALLISON BUSBY
DB 6771 PG 022
PIN # 06090059
ZONING: RCD

NOW OR FORMERLY
ROBBIE & MARK RUSSELL
DB 6768 PG 316
PIN # 06090058
ZONING: RCD

NOW OR FORMERLY
STANDARD PACIFIC OF THE CAROLINAS
DB 6459 PG 414
PIN # 06090092
ZONING: RCD

NOW OR FORMERLY
HILL SHIRLEY N
PIN # 06090002
ZONING: R-40

NOW OR FORMERLY
STALLINGS INVESTORS I LLC
DB 5762 PG 388
PIN # 06087002C
ZONING: CU GR STALLINGS

NOW OR FORMERLY
STALLINGS INVESTORS I LLC
DB 5762 PG 388
PIN # 071500090
ZONING: CU GR STALLINGS

NOW OR FORMERLY
STALLINGS INVESTORS, LLC
DB 5762 PG 385
PIN #06087003
ZONING: CU GR STALLINGS

NOW OR FORMERLY
SERVICE OIL OF MONROE INC
PIN #07141004

NOW OR FORMERLY
STEGALL PETROLEUM INC
DB 5720 PG 070
PIN #07150009H
ZONING: R-40

NOW OR FORMERLY
MREC FALLS AT WEDDINGTON LLC
PIN # 06090142
ZONING: RCD

NOW OR FORMERLY
PRESTIS PAUL IV &
PRESTIS KIMBERLY B
PIN # 07150660
ZONING: RCD

NOW OR FORMERLY
BROOKHAVEN CITIZENS ASSEMBLY INC
PIN # 07150660
ZONING: RCD

NOW OR FORMERLY
UNION COUNTY BOARD OF EDUCATION
DB 3013 PG 781
PIN #7150116
ZONING: CSA INDUSTRIAL

NOW OR FORMERLY
STANDARD PACIFIC OF THE CAROLINAS
DB X PG X
PIN # 06090092
ZONING: R-40

NOW OR FORMERLY
VINTAGE CREEK OWNERS ASSOCIATION INC
DB. 6485 PG. 297
PIN # 06090093
ZONING: RCD

CeC2

FOR CONTINUATION SEE PLAN ABOVE LEFT

LEGEND (EROSION CONTROL)

SYMBOL		DETAIL	SYMBOL		DETAIL
	STABILIZED CONSTRUCTION ENTRANCE	-/-		GRAVEL AND RIP RAP FILTER BERM BASIN	-/-
SF	SILT FENCE	-/-		PROPOSED STORM DRAINAGE	-/-
SF	TEMPORARY SILT FENCE OUTLET	-/-		SEDIMENT BASIN BAFFLE	-/-
	STONE INLET PROTECTION	-/-		SEDIMENT BASIN	-/-
	GRAVEL RIP RAP APRON	-/-		SEDIMENT BASIN SKIMMER	-/-
	DENUDED LIMITS	-/-		SPILLWAY	-/-
	DRAINAGE AREA	-/-		TEMPORARY WATTLE CHECK DAM	-/-
	TEMPORARY DIVERSION DITCH	-/-	Aa Bb	SOILS DELINEATION	-/-

GRAPHIC SCALE

100 0 50 100 200 400

(IN FEET)
1 inch = 100 ft.

WK DICKSON
community infrastructure consultants

PRELIMINARY DESIGN - NOT RELEASED FOR CONSTRUCTION, RECORDATION, CONVEYANCES, OR SALES

WK DICKSON
community infrastructure consultants
1320 MAIN STREET
SUITE 400
COLUMBIA, SC 29201
(t)803-786-4261
(f)803-786-4263
WWW.WKDICKSON.COM

NORTH CAROLINA PROFESSIONAL ENGINEER SEAL 035121 6/28/17 BRIAN E. THOMAS

PROFESSIONAL SEAL

REVISION RECORD

NO.	DATE	DESCRIPTION	BY
1.	4/24/17	REVISED PER COMMENTS FROM NCDOT, TOWN OF WEDDINGTON, UCPW, & NCDEQ	JEB
2.	6/6/17	REVISED PER COMMENTS FROM NCDOT, TOWN OF WEDDINGTON, UCPW, & NCDEQ	TAK
3.	6/20/17	REVISED PER COMMENTS FROM TOWN OF WEDDINGTON	WGB
4.	6/28/17	REVISED PER COMMENTS FROM NCDOT	TAK

PROJECT NAME:
GRAHAM ALLEN SUBDIVISION
TOWN OF WEDDINGTON, SANDY RIDGE TOWNSHIP, UNION COUNTY, NC

DRAWING TITLE:
PHASE I EROSION CONTROL OVERALL OVERVIEW

PROJ. MGR.:	BET
DESIGN BY:	MDJ
DRAWN BY:	MDJ
PROJ. DATE:	OCT. 2016

DRAWING NUMBER:
6.0

WKD PROJ. NO.:
20160191.00.CL

P:\ENTM Projects\Current Hosting\20160191XXCL - Graham Allen Subdivision Redesign Ch\CADD\Civil3d\Drawings\6.0 OVERALL EC PH I.dwg, @BIDTOOK, 6/28/2017 10:29:58 AM

COPYRIGHT © W.K. DICKSON & CO., INC. ALL RIGHTS RESERVED. REPRODUCTION/USE OF THIS CONTENT OF THIS DOCUMENT, ADVTXOR OR DRAWINGS IN ANY FORM WITHOUT PRIOR WRITTEN CONSENT OF W.K. DICKSON & CO., INC. IS PROHIBITED. ANY UNAUTHORIZED REUSE OF THESE PLANS WILL BE CONSIDERED TO BE WILFUL FALSE COPIES FROM THE ORIGINAL OF THIS DOCUMENT MARKED WITH AN ORIGINAL SIGNATURE AND SEAL SHALL BE CONSIDERED TO BE WILFUL FALSE COPIES

EXISTING WETLANDS (TYP.)

DRAINAGE AREA TO SEDIMENT BASIN 1 (PHASE 1) OUTLET 15.65 AC.

TEMPORARY SILT FENCE (TYP.)

TEMPORARY DIVERSION DITCH #2

STRAW WATTLE (TYP.)

TEMPORARY DIVERSION DITCH #2

EX. EOP

SILT FENCE OUTLET DEVICE (TYP.)

TEMPORARY CONSTRUCTION ENTRANCE (TYP.)

CONTRACTOR SHALL PROTECT EXISTING STORM DRAINAGE CULVERT

NOW OR FORMERLY
STALLINGS INVESTORS I LLC
DB 5762 PG 388
PIN # 07150009G
ZONING: CU OR STALLINGS

ARBORBROOK AVENUE
(50' PUBLIC R/W)

WEDDINGTON-MATTHEWS ROAD - SR 1344 (≈60' PUBLIC R/W)

DENUDED LIMITS
24.88 AC.

TEMPORARY DIVERSION DITCH #2

100' RIGHT-OF-WAY BUFFER

TEMPORARY DIVERSION DITCH #1

BOSWELL WAY
(50' PUBLIC R/W)

NOW OR FORMERLY
STEGALL PETROLEUM INC
DB 5720 PG 070
PIN #07150009H
ZONING: R-40

BAFFLES (TYP.)

TEMPORARY DIVERSION DITCH #1

TEMPORARY CONSTRUCTION ENTRANCE (TYP.)

DENUDED LIMITS
24.88 AC.

SILT FENCE OUTLET DEVICE (TYP.)

SEDIMENT BASIN #1
MINIMUM DIMENSIONS:
LENGTH: 130'
WIDTH: 80'

EXISTING OVERHEAD POWER STRUCTURE (TYP.)

EXISTING OVERHEAD POWERLINE (TYP.)

EX. EOP

EX. EOP

DUKE ENERGY RIGHT OF WAY (≈319' R/W)

NOW OR FORMERLY
BROOKHAVEN CITIZENS ASSEMBLY INC
DB. 6431 PG. 287
PIN # 07150660
ZONING: RCD

NOW OR FORMERLY
GREENE JOHN MATTHEW
GREENE JENNIE DAVENPORT
DB. 5553 PG. 653
PIN # 07150664
ZONING: RCD

ANTIOCH CHURCH ROAD - SR 1338
(≈60' PUBLIC R/W)

NOW OR FORMERLY
UNION COUNTY BOARD OF EDUCATION
DB 3013 PG 781
PIN #F7150116
ZONING: SF-1 INDIAN TRAIL

GRAPHIC SCALE

60 0 30 100 120 240

(IN FEET)
1 inch = 60 ft.

WK DICKSON
community infrastructure consultants

PRELIMINARY DESIGN - NOT RELEASED FOR CONSTRUCTION, RECORDATION, CONVEYANCES, OR SALES

WK DICKSON
community infrastructure consultants

1320 MAIN STREET
SUITE 400
COLUMBIA, SC 29201
(t)803-786-4261
(f)803-786-4263

WWW.WKDICKSON.COM

NORTH CAROLINA PROFESSIONAL ENGINEER SEAL 033121 BRIAN E. THOMAS

PROFESSIONAL SEAL

REVISION RECORD

NO.	DATE	DESCRIPTION	BY
1.	4/24/17	REVISED PER COMMENTS FROM NCDOT, TOWN OF WEDDINGTON, UCPW, & NCDEQ	JEB
2.	6/6/17	REVISED PER COMMENTS FROM NCDOT, TOWN OF WEDDINGTON, UCPW, & NCDEQ	TAK
3.	6/20/17	REVISED PER COMMENTS FROM TOWN OF WEDDINGTON	WGB
4.	6/28/17	REVISED PER COMMENTS FROM NCDOT	TAK

PROJECT NAME:
GRAHAM ALLEN SUBDIVISION
TOWN OF WEDDINGTON, SANDY RIDGE TOWNSHIP, UNION COUNTY, NC

DRAWING TITLE:
PHASE I EROSION CONTROL PLAN - SHEET 1

PROJ. MGR.:	BET
DESIGN BY:	MDJ
DRAWN BY:	MDJ
PROJ. DATE:	OCT. 2016

DRAWING NUMBER:
6.1

WKD PROJ. NO.:
20160191.00.CL

ELEVATION Projects\Current History\20120191\00CE - Graham Allen Subdivision Redesign\CIVIL\CAD\20120191sheet1.6.1.ECP.DWG by JBRITTON, 6/28/2017 1:31:29 PM

COPYRIGHT © W.K. DICKSON & CO., INC. ALL RIGHTS RESERVED. REPRODUCTION OR USE OF THE CONTENTS OF THIS DOCUMENT, ADVTOKOR OTHERWISE, WITHOUT THE EXPRESS WRITTEN PERMISSION OF W.K. DICKSON & CO., INC. IS PROHIBITED. ANY UNAUTHORIZED USE SHALL BE AT THE USER'S SOLE RISK AND WITHOUT LIABILITY TO W.K. DICKSON & CO., INC. AND THE USER SHALL INDEMNIFY AND HOLD W.K. DICKSON & CO., INC. HARMLESS FROM AND AGAINST ANY AND ALL LOSS, DAMAGE, CLAIM OR LIABILITY ARISING FROM ANY SUCH UNAUTHORIZED USE. IF THIS DOCUMENT IS IN DIGITAL FORM, ONLY THE TEXTUAL AND GRAPHICAL INFORMATION AND DATA CONTAINED IN THE FINAL HARD COPY PLOTTED OR PRINTED BY W.K. DICKSON & CO., INC. SHALL BE CONSIDERED TO BE VALID. ANY CHANGES MADE TO THE ELECTRONIC FILE AFTER THE HARD COPY WAS PLOTTED OR PRINTED BY W.K. DICKSON & CO., INC. ARE NOT VALID. ANY USE OF THE INFORMATION CONTAINED IN THIS DIGITAL FILE SHALL BE AT THE USER'S SOLE RISK. ANY RE-USE OF THE DIGITAL FILE FOR PURPOSES OTHER THAN THOSE FOR WHICH IT WAS ORIGINALLY INTENDED SHALL BE AT THE USER'S SOLE RISK AND WITHOUT LIABILITY TO W.K. DICKSON & CO., INC. THE USER SHALL INDEMNIFY AND HOLD W.K. DICKSON & CO., INC. HARMLESS FROM AND AGAINST ANY AND ALL LOSS, DAMAGE, CLAIM OR LIABILITY ARISING FROM ANY SUCH RE-USE. ANY RE-USE OF THE DIGITAL FILE FOR PURPOSES OTHER THAN THOSE FOR WHICH IT WAS ORIGINALLY INTENDED SHALL BE AT THE USER'S SOLE RISK AND WITHOUT LIABILITY TO W.K. DICKSON & CO., INC. THE USER SHALL INDEMNIFY AND HOLD W.K. DICKSON & CO., INC. HARMLESS FROM AND AGAINST ANY AND ALL LOSS, DAMAGE, CLAIM OR LIABILITY ARISING FROM ANY SUCH RE-USE. IF THIS DOCUMENT IS IN DIGITAL FORM, ONLY THE TEXTUAL AND GRAPHICAL INFORMATION AND DATA CONTAINED IN THE FINAL HARD COPY PLOTTED OR PRINTED BY W.K. DICKSON & CO., INC. SHALL BE CONSIDERED TO BE VALID. ANY CHANGES MADE TO THE ELECTRONIC FILE AFTER THE HARD COPY WAS PLOTTED OR PRINTED BY W.K. DICKSON & CO., INC. ARE NOT VALID.

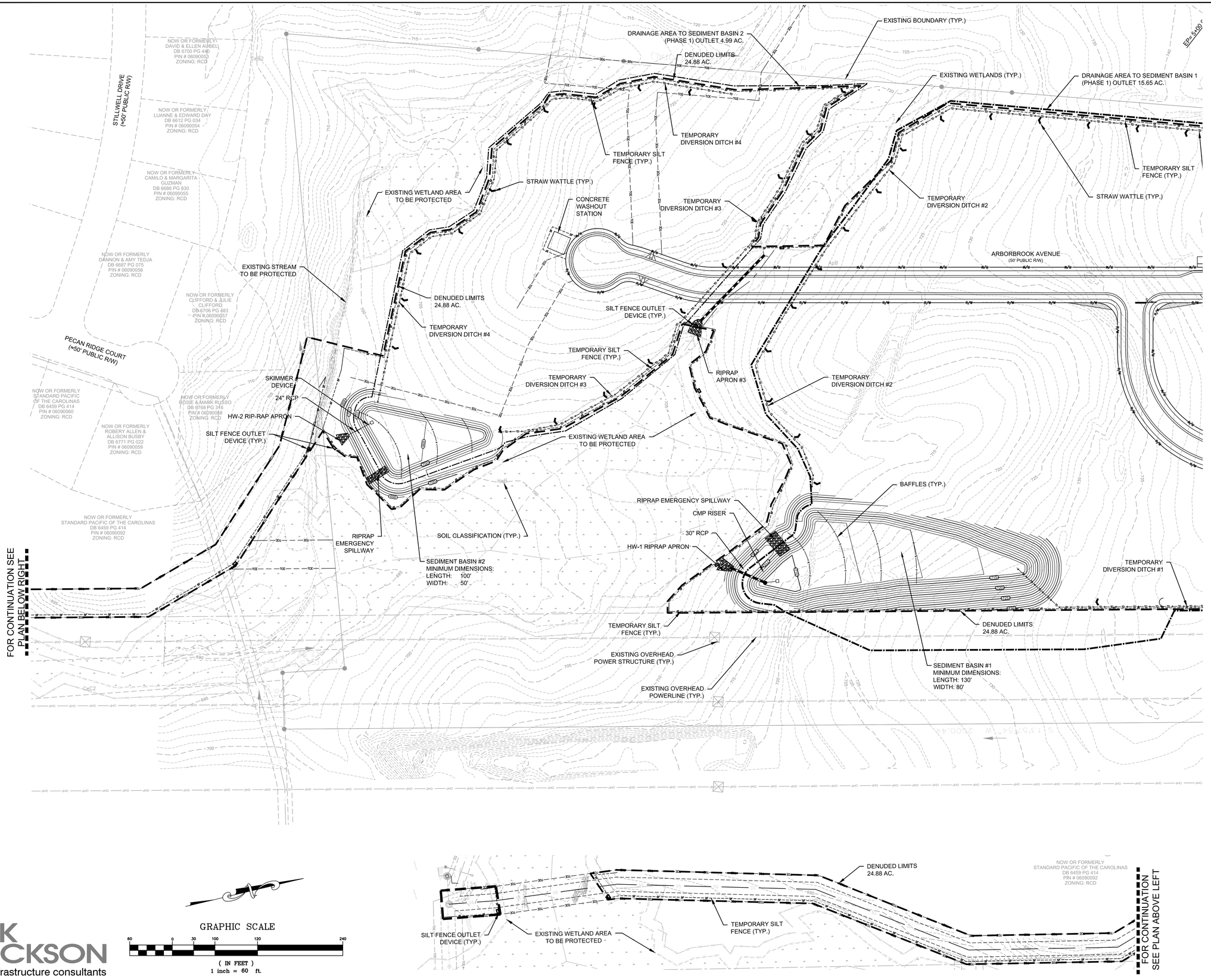

GRAPHIC SCALE

60 0 30 100 120 240

(IN FEET)
1 inch = 60 ft.

WK DICKSON
community infrastructure consultants

PRELIMINARY DESIGN - NOT RELEASED FOR CONSTRUCTION, RECORDATION, CONVEYANCES, OR SALES

WK DICKSON
community infrastructure consultants
1320 MAIN STREET
SUITE 400
COLUMBIA, SC 29201
(t)803-786-4261
(f)803-786-4263
WWW.WKDICKSON.COM

NORTH CAROLINA PROFESSIONAL ENGINEER BRIAN E. THOMAS 033121 4/28/17

PROFESSIONAL SEAL

REVISION RECORD

NO.	DATE	DESCRIPTION	BY
1.	4/24/17	REVISED PER COMMENTS FROM NCDOT, TOWN OF WEDDINGTON, UCPW, & NCDEQ	JEB
2.	5/8/17	REVISED PER COMMENTS FROM NCDOT, TOWN OF WEDDINGTON, UCPW, & NCDEQ	TAK
3.	6/20/17	REVISED PER COMMENTS FROM TOWN OF WEDDINGTON	WGB
4.	6/28/17	REVISED PER COMMENTS FROM NCDOT	TAK

PROJECT NAME:
GRAHAM ALLEN SUBDIVISION
TOWN OF WEDDINGTON, SANDY RIDGE TOWNSHIP, UNION COUNTY, NC

DRAWING TITLE:
PHASE I EROSION CONTROL PLAN - SHEET 2

PROJ. MGR.:	BET
DESIGN BY:	MDJ
DRAWN BY:	MDJ
PROJ. DATE:	OCT. 2016

DRAWING NUMBER:
6.2

WKD PROJ. NO.:
20160191.00.CL

P:\ATA\Wk Projects\current Imaging\20_20160191\00CL - Graham Allen Subdivision Redesign Ch\CADD\DWG\Sheets\1 4.21SC\A\A1H1.dwg, @MdtTOK, 6/28/2017 10:01:48 AM

COPYRIGHT © W.K. DICKSON & CO., INC., ALL RIGHTS RESERVED. REPRODUCTION OR USE OF THE CONTENTS OF THIS DOCUMENT, ADDITIONS OR MODIFICATIONS TO THE CONTENTS OF THIS DOCUMENT, OR ANY PORTION THEREOF, WITHOUT THE PRIOR WRITTEN CONSENT OF W.K. DICKSON & CO., INC. IS STRICTLY PROHIBITED. ANY UNAUTHORIZED REUSE OF THE CONTENTS OF THIS DOCUMENT OR ANY PART THEREOF, OR OF THE ORIGINAL OF THIS DOCUMENT MARKED WITH AN ORIGINAL SIGNATURE AND SEAL, SHALL BE CONSIDERED TO BE MISUSE. ALL RIGHTS RESERVED.

FOR CONTINUATION SEE PLAN BELOW RIGHT

SEE SHEET 6.5

SEE SHEET 6.4

SEE SHEET 6.5

STILLWELL DRIVE (≈50' PUBLIC R/W)

PECAN RIDGE COURT (≈50' PUBLIC R/W)

ARBORBROOK AVENUE (50' PUBLIC R/W)

BOSWELL WAY (50' PUBLIC R/W)

WEDDINGTON-MATTHEWS ROAD - SR 1344 (≈80' PUBLIC R/W)

ANTIOCH CHURCH ROAD - SR 1338 (≈60' PUBLIC R/W)

DUKE ENERGY RIGHT OF WAY (≈319' R/W)

EXISTING BOUNDARY (TYP.)

EXISTING WETLANDS (TYP.)

DRAINAGE AREA TO SEDIMENT BASIN 2 (PHASE II) OUTLET 4.84 AC.

DRAINAGE AREA TO SEDIMENT BASIN 1 (PHASE II) OUTLET 16.33 AC.

100' RIGHT-OF-WAY BUFFER

BM-1

BM-2

BM-3

BM-4

SEDIMENT BASIN #2
MINIMUM DIMENSIONS:
LENGTH: 100 LF
WIDTH: 50 LF

SEDIMENT BASIN #1
MINIMUM DIMENSIONS:
LENGTH: 130 LF
WIDTH: 80 LF

DENUDED LIMITS
24.88 AC.

NOW OR FORMERLY
BRADLEY & JACQUELINE
DB 6729 PG 540
PIN # 06090052
ZONING: RCD

NOW OR FORMERLY
DAVID & ELLEN AUBEL
DB 6709 PG 440
PIN # 06090053
ZONING: RCD

NOW OR FORMERLY
LUANNE & EDWARD DAY
DB 6612 PG 034
PIN # 06090054
ZONING: RCD

NOW OR FORMERLY
CAMILO & MARGARITA GUZMAN
DB 6686 PG 830
PIN # 06090055
ZONING: RCD

NOW OR FORMERLY
STANDARD PACIFIC OF THE CAROLINAS
DB X PG X
PIN # 06090092
ZONING: R-40

NOW OR FORMERLY
DANNON & AMY TEDJA
DB 6687 PG 075
PIN # 06090056
ZONING: RCD

NOW OR FORMERLY
CLIFFORD & JULIE CLIFFORD
DB 6706 PG 483
PIN # 06090057
ZONING: RCD

NOW OR FORMERLY
ROBBIE & MARK RUSSELL
DB 6768 PG 316
PIN # 06090058
ZONING: RCD

NOW OR FORMERLY
ROBERY ALLEN & ALLISON BUSBY
DB 6771 PG 022
PIN # 06090059
ZONING: RCD

NOW OR FORMERLY
STANDARD PACIFIC OF THE CAROLINAS
DB 6459 PG 414
PIN # 06090092
ZONING: RCD

NOW OR FORMERLY
HILL SHIRLEY N
06090002
ZONING: R-40

NOW OR FORMERLY
STALLINGS INVESTORS I LLC
DB 5762 PG 388
PIN # 06087002C
ZONING: CU GR STALLINGS

NOW OR FORMERLY
STALLINGS INVESTORS I LLC
DB 5762 PG 388
PIN # 071500006
ZONING: CU GR STALLINGS

NOW OR FORMERLY
STALLINGS INVESTORS I LLC
DB 5762 PG 388
PIN #06087003
ZONING: CU GR STALLINGS

NOW OR FORMERLY
SERVICE OIL OF MONROE INC
PIN #07141004

NOW OR FORMERLY
STEGALL PETROLEUM INC
DB 5720 PG 070
PIN #07150009H
ZONING: R-40

NOW OR FORMERLY
VINTAGE CREEK OWNERS ASSOCIATION INC
DB. 6485 PG. 297
PIN # 06090093
ZONING: RCD

NOW OR FORMERLY
MREC FALLS AT WEDDINGTON LLC
PIN # 06090142
ZONING: RCD

NOW OR FORMERLY
UNION COUNTY BOARD OF EDUCATION
DB 3013 PG 781
PIN #7150116
ZONING: SF-2 INDUSTRIAL

NOW OR FORMERLY
BROOKHAVEN CITIZENS ASSEMBLY INC
PIN # 07150088

NOW OR FORMERLY
PRESTIS PAUL LLC

CeC2

LEGEND (EROSION CONTROL)

SYMBOL		DETAIL	SYMBOL		DETAIL
	STABILIZED CONSTRUCTION ENTRANCE	-/-		GRAVEL AND RIP RAP FILTER BERM BASIN	-/-
SF	SILT FENCE	-/-		PROPOSED STORM DRAINAGE	-/-
SF	TEMPORARY SILT FENCE OUTLET	-/-		SEDIMENT BASIN BAFFLE	-/-
	STONE INLET PROTECTION	-/-		SEDIMENT BASIN	-/-
	GRAVEL RIP RAP APRON	-/-		SEDIMENT BASIN SKIMMER	-/-
	DENUDED LIMITS	-/-		SPILLWAY	-/-
	DRAINAGE AREA	-/-		TEMPORARY WATTLE CHECK DAM	-/-
	TEMPORARY DIVERSION DITCH	-/-	Aa Bb	SOILS DELINEATION	-/-

GRAPHIC SCALE

100 0 50 100 200 400

(IN FEET)
1 inch = 100 ft.

WK DICKSON
community infrastructure consultants

1320 MAIN STREET
SUITE 400
COLUMBIA, SC 29201
(t)803-786-4261
(f)803-786-4263

WWW.WKDICKSON.COM

NORTH CAROLINA PROFESSIONAL ENGINEER BRIAN E. THOMAS 033121 4/28/17

PROFESSIONAL SEAL

REVISION RECORD

NO.	DATE	DESCRIPTION	BY
1.	4/24/17	REVISED PER COMMENTS FROM NCDOT, TOWN OF WEDDINGTON, UCPW, & NCDEQ	JEB
2.	6/6/17	REVISED PER COMMENTS FROM NCDOT, TOWN OF WEDDINGTON, UCPW, & NCDEQ	TAK
3.	6/20/17	REVISED PER COMMENTS FROM TOWN OF WEDDINGTON	WGB
4.	6/28/17	REVISED PER COMMENTS FROM NCDOT	TAK

PROJECT NAME:
GRAHAM ALLEN SUBDIVISION
TOWN OF WEDDINGTON, SANDY RIDGE TOWNSHIP, UNION COUNTY, NC

DRAWING TITLE:
PHASE II EROSION CONTROL PLAN OVERVIEW

PROJ. MGR.:	BET
DESIGN BY:	MDJ
DRAWN BY:	MDJ
PROJ. DATE:	OCT. 2016

DRAWING NUMBER:
6.3

WKD PROJ. NO.:
20160191.00.CL

PRELIMINARY DESIGN - NOT RELEASED FOR CONSTRUCTION, RECORDATION, CONVEYANCES, OR SALES

P:\ENTM Projects\Current Hosting\20160191XXCL - Graham Allen Subdivision Redesign CDs\CADD\Civil\Drawings\3 CN\Plan_EC Ph 2.dwg, JBRITCH, 6/28/2017 10:29:48 AM

COPYRIGHT © W.K. DICKSON & CO., INC. ALL RIGHTS RESERVED. REPRODUCTION OR USE OF THE CONTENTS OF THIS DOCUMENT, ADVTORM OR OTHERWISE, WITHOUT THE EXPRESS WRITTEN PERMISSION OF W.K. DICKSON & CO., INC. IS PROHIBITED. ANY UNAUTHORIZED REUSE OF THE CONTENTS OF THIS DRAWING FOR ANY OTHER PROJECT OR EXTENSION TO THIS PROJECT, OR TRANSFER TO ANY OTHER PARTY WITHOUT THE PRIOR WRITTEN AUTHORIZATION OF W.K. DICKSON & CO., INC. SHALL BE CONSIDERED TO BE UNLAWFUL USE. THE CONTENTS FROM THIS DRAWING SHALL NOT BE USED WITHOUT AN ORIGINAL SIGNATURE AND SEAL, AND SHALL BE CONSIDERED TO BE NULL AND VOID.

EXISTING WETLANDS (TYP.)
DRAINAGE AREA TO SEDIMENT BASIN 1 (PHASE II) OUTLET 16.33 AC.
TEMPORARY SILT FENCE (TYP.)
STRAW WATTLE (TYP.)
PERMANENT DIVERSION DITCH #1
PERMANENT DIVERSION DITCH #2
PERMANENT DIVERSION DITCH #3
PERMANENT DIVERSION DITCH #1
ARBORBROOK AVENUE (50' PUBLIC R/W)
TEMPORARY STONE INLET PROTECTION (TYP. FOR ALL CATCH BASINS)
SILT FENCE OUTLET DEVICE (TYP.)
TEMPORARY CONSTRUCTION ENTRANCE (TYP.)
FE-J1 RIPRAP APRON
CONTRACTOR SHALL PROTECT EXISTING STORM DRAINAGE CULVERT
EX. EOP
NOW OR FORMERLY STALLINGS INVESTORS I LLC DB 5762 PG 388 PIN # 07150009G ZONING: CU OR STALLINGS
WEDDINGTON-MATTHEWS ROAD - SR 1344 (≈60' PUBLIC R/W)
100' RIGHT-OF-WAY BUFFER
PERMANENT DIVERSION DITCH #4
DENUDED LIMITS 24.88 AC.
BOSWELL WAY (50' PUBLIC R/W)
TEMPORARY STONE INLET PROTECTION (TYP. FOR ALL CATCH BASINS)
NOW OR FORMERLY STEGALL PETROLEUM INC DB 5720 PG 070 PIN #07150009H ZONING: R-40
TEMPORARY CONSTRUCTION ENTRANCE (TYP.)
HW-D1 RIPRAP APRON
HW-A1 RIPRAP APRON
BAFFLES (TYP.)
PERMANENT DIVERSION DITCH #9
SILT FENCE OUTLET DEVICE (TYP.)
COS-1 24,789.00 SF 0.57 AC
FE-K1 RIPRAP APRON
DENUDED LIMITS 24.88 AC.
SEDIMENT BASIN #1
PERMANENT DIVERSION DITCH #8
EXISTING OVERHEAD POWER STRUCTURE (TYP.)
EXISTING OVERHEAD POWERLINE (TYP.)
EX. EOP
DUKE ENERGY RIGHT OF WAY (≈319' R/W)
ANTIOCH CHURCH ROAD - SR 1338 (≈60' PUBLIC R/W)
NOW OR FORMERLY UNION COUNTY BOARD OF EDUCATION DB 3013 PG 781 PIN #F7150116 ZONING: SF-1 INDIAN TRAIL
NOW OR FORMERLY BROOKHAVEN CITIZENS ASSEMBLY INC DB. 6431 PG. 287 PIN # 07150660 ZONING: RCD
NOW OR FORMERLY GREENE, JOHN MATTHEW GREENE JENNIE DAVENPORT DB. 5553 PG. 653 PIN # 07150664 ZONING: RCD

	SF	AC
1	40,468.55	0.93
2	40,952.35	0.94
3	40,081.12	0.92
4	40,347.82	0.93
5	41,423.88	0.95
6	41,669.37	0.96
7	43,148.02	0.99
8	55,719.22	1.28
9	48,063.14	1.10
10	50,121.10	1.15
11	42,276.84	0.97
12	40,151.94	0.92
22	40,006.35	0.92
23	40,097.65	0.92
24	40,044.64	0.92
25	40,347.82	0.93

GRAPHIC SCALE
60 0 30 100 120 240
(IN FEET)
1 inch = 60 ft.

WK DICKSON
community infrastructure consultants

WK DICKSON
community infrastructure consultants
1320 MAIN STREET
SUITE 400
COLUMBIA, SC 29201
(t)803-786-4261
(f)803-786-4263
WWW.WKDICKSON.COM

NORTH CAROLINA PROFESSIONAL ENGINEER BRIAN E. THOMAS 033121 6/28/17
PROFESSIONAL SEAL

PRELIMINARY DESIGN - NOT RELEASED FOR CONSTRUCTION, RECORDATION, CONVEYANCES, OR SALES

REVISION RECORD

NO.	DATE	DESCRIPTION	BY
1.	4/24/17	REVISED PER COMMENTS FROM NCDOT, TOWN OF WEDDINGTON, UCPW, & NCDEQ	JEB
2.	6/6/17	REVISED PER COMMENTS FROM NCDOT, TOWN OF WEDDINGTON, UCPW, & NCDEQ	TAK
3.	6/20/17	REVISED PER COMMENTS FROM TOWN OF WEDDINGTON	WGB
4.	6/28/17	REVISED PER COMMENTS FROM NCDOT	TAK

PROJECT NAME:
GRAHAM ALLEN SUBDIVISION
TOWN OF WEDDINGTON, SANDY RIDGE TOWNSHIP, UNION COUNTY, NC

DRAWING TITLE:
PHASE II EROSION CONTROL PLAN - SHEET 1

PROJ. MGR.:	BET
DESIGN BY:	MDJ
DRAWN BY:	MDJ
PROJ. DATE:	OCT. 2016

DRAWING NUMBER:
6.4
WKD PROJ. NO.:
20160191.00.CL

P:\LATA\Jill Projects\Current Hosting\20_20160191\WORK_Graham Allen Subdivision Redesign\CIVIL\CAD\DWG\Sheets\6.4 ESC PLAN PH 2.dwg, @BRTOW, 6/28/2017 10:28:38 AM

COPYRIGHT © W.K. DICKSON & CO., INC. ALL RIGHTS RESERVED. REPRODUCTION OR USE OF THE CONTENTS OF THIS DOCUMENT, ADVTAKOR A PORTION THEREOF, WITHOUT THE EXPRESS WRITTEN PERMISSION OF W.K. DICKSON & CO., INC. IS PROHIBITED. ANY UNAUTHORIZED REUSE OF THE CONTENTS OF THIS DOCUMENT OR FOR ANY PURPOSE OTHER THAN THE SPECIFIC PROJECT FOR WHICH IT WAS PREPARED SHALL BE WITHOUT LIABILITY TO W.K. DICKSON & CO., INC. AND SHALL BE CONSIDERED TO BE MISUSE OF THE DOCUMENT. ANY REUSE OF THE DOCUMENT WITHOUT WRITTEN VERIFICATION OR ADAPTATION BY W.K. DICKSON & CO., INC. FOR THE SPECIFIC PURPOSE INTENDED WILL BE AT USER'S SOLE RISK AND WITHOUT LIABILITY OR LEGAL EXPOSURE TO W.K. DICKSON & CO., INC. ALL RIGHTS ARE RESERVED. UNAUTHORIZED REUSE OF THE CONTENTS OF THIS DOCUMENT, ADVTAKOR A PORTION THEREOF, WITHOUT THE EXPRESS WRITTEN PERMISSION OF W.K. DICKSON & CO., INC. IS PROHIBITED. ANY UNAUTHORIZED REUSE OF THE CONTENTS OF THIS DOCUMENT OR FOR ANY PURPOSE OTHER THAN THE SPECIFIC PROJECT FOR WHICH IT WAS PREPARED SHALL BE WITHOUT LIABILITY TO W.K. DICKSON & CO., INC. AND SHALL BE CONSIDERED TO BE MISUSE OF THE DOCUMENT. ANY REUSE OF THE DOCUMENT WITHOUT WRITTEN VERIFICATION OR ADAPTATION BY W.K. DICKSON & CO., INC. FOR THE SPECIFIC PURPOSE INTENDED WILL BE AT USER'S SOLE RISK AND WITHOUT LIABILITY OR LEGAL EXPOSURE TO W.K. DICKSON & CO., INC.

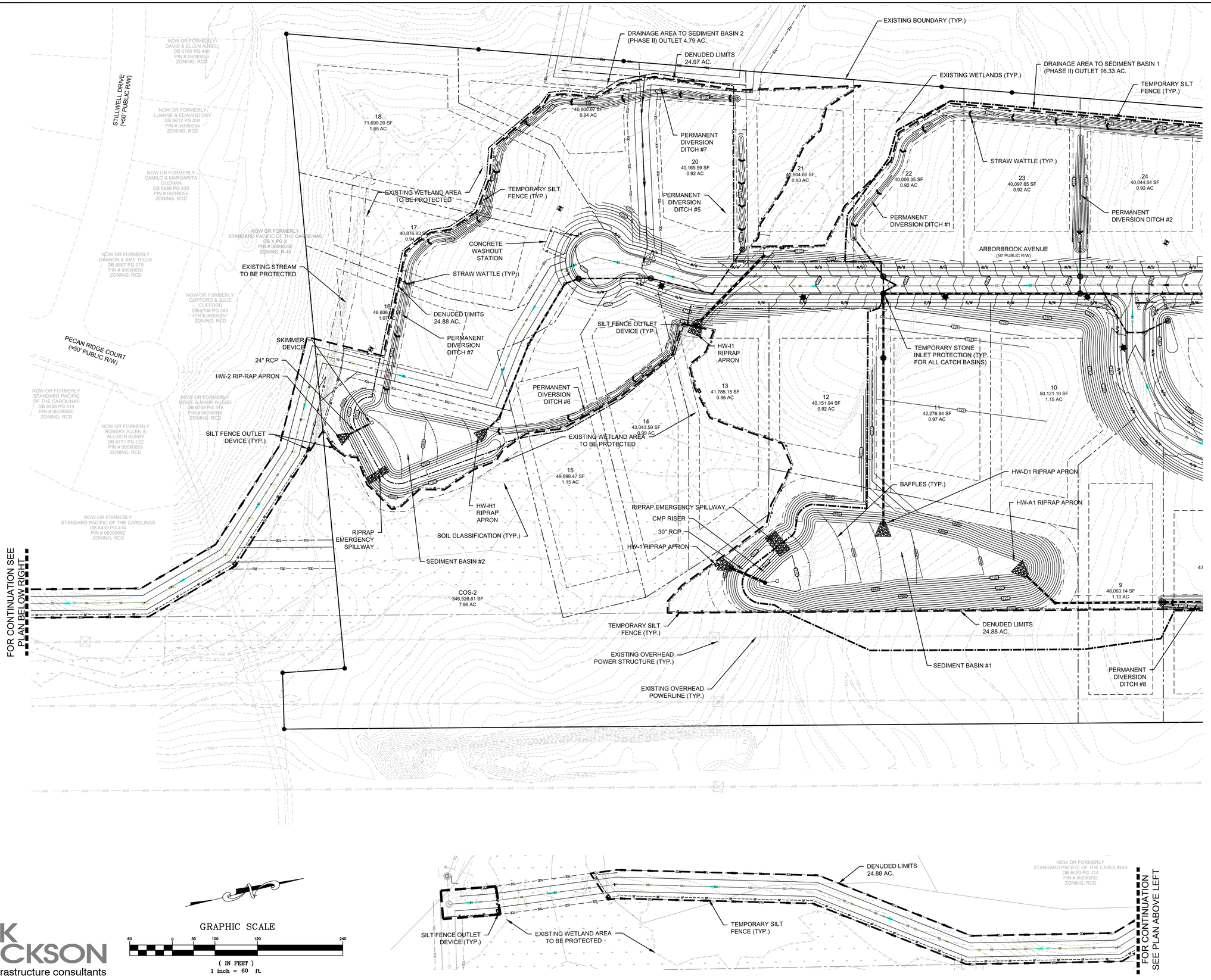

GRAPHIC SCALE

60 0 30 100 120 240

(IN FEET)
1 inch = 60 ft.

WK DICKSON
community infrastructure consultants

1320 MAIN STREET
SUITE 400
COLUMBIA, SC 29201
(t)803-786-4261
(f)803-786-4263

WWW.WKDICKSON.COM

NORTH CAROLINA PROFESSIONAL ENGINEER BRIAN E. THOMAS 033121 4/28/17

PROFESSIONAL SEAL

NO	DATE	DESCRIPTION	BY
1.	4/24/17	REVISED PER COMMENTS FROM NCDOT, TOWN OF WEDDINGTON, UCPW, & NCDEQ	JEB
2.	6/6/17	REVISED PER COMMENTS FROM NCDOT, TOWN OF WEDDINGTON, UCPW, & NCDEQ	TAK
3.	6/20/17	REVISED PER COMMENTS FROM TOWN OF WEDDINGTON	WGB
4.	6/28/17	REVISED PER COMMENTS FROM NCDOT	TAK

REVISION RECORD

PRELIMINARY DESIGN - NOT RELEASED FOR CONSTRUCTION, RECORDATION, CONVEYANCES, OR SALES

PROJECT NAME:
GRAHAM ALLEN SUBDIVISION
TOWN OF WEDDINGTON, SANDY RIDGE TOWNSHIP, UNION COUNTY, NC

DRAWING TITLE:
PHASE II EROSION CONTROL PLAN - SHEET 2

PROJ. MGR.:	BET
DESIGN BY:	MDJ
DRAWN BY:	MDJ
PROJ. DATE:	OCT. 2016
DRAWING NUMBER:	6.5
WKD PROJ. NO.:	20160191.00.CL

I:\LT\PATH\Projects\Grading\20160191\DGS_ Graham Allen Subdivision Redesign Ch\CAD\Dwgs\sheet 4 4 ESC PLAN Ph 2.dwg, JBRITTON, 6/28/2017 11:34:06 AM

COPYRIGHT © W.K. DICKSON & CO., INC. ALL RIGHTS RESERVED. REPRODUCTION/USE OF THIS DOCUMENT, ANDITS CONTENTS IN WHOLE OR IN PART, WITHOUT THE WRITTEN CONSENT OF W.K. DICKSON & CO., INC. SHALL BE A VIOLATION OF APPLICABLE LAWS. THIS DOCUMENT IS NOT TO BE USED FOR ANY PROJECT OTHER THAN THE SPECIFIC PROJECT FOR WHICH IT WAS PREPARED AND PUBLISHED. UNAUTHORIZED USE OF THIS DOCUMENT IN ANY FORM WITHOUT WRITTEN APPROVAL FROM W.K. DICKSON & CO., INC. SHALL BE CONSIDERED TO BE VOID. THE CORPORATE SEAL MUST APPEAR ON ALL PRINTED COPIES OF THIS DOCUMENT. ELECTRONIC COPIES OF THIS DOCUMENT ARE NOT TO BE ALTERED IN ANY WAY. ANY REUSE OF THIS DOCUMENT WITHOUT WRITTEN VERIFICATION OR ADAPTATION BY W.K. DICKSON & CO., INC. FOR THE SPECIFIC PURPOSE INTENDED WILL BE AT THE USER'S SOLE RISK AND WITHOUT LIABILITY OR LEGAL EXPOSURE TO W.K. DICKSON & CO., INC. AND USER SHALL INDEMNIFY AND HOLD HARMLESS W.K. DICKSON & CO., INC. AND ITS OFFICERS AND EMPLOYEES FROM ALL CLAIMS, DAMAGES, LOSSES AND EXPENSES ARISING OUT OF OR RESULTING THEREFROM. ANY MODIFICATION OF THIS DOCUMENT WITHOUT THE WRITTEN CONSENT OF W.K. DICKSON & CO., INC. SHALL REMOVE ALL REFERENCES TO W.K. DICKSON & CO., INC.

GENERAL NOTES:

1. SURVEY INFORMATION WAS OBTAIN FROM METROLINA ENGINEERING & SURVEYING ASSOCIATES ON FEBRUARY 1, 2016.
2. SURVEY HORIZONTAL REFERENCE: NOT NOTED ON SURVEY
3. SURVEY VERTICAL REFERENCE: NOT NOTED ON SURVEY
4. SHORING WILL BE IN ACCORDANCE WITH OSHA TRENCHING STANDARDS PART 1926, SUBPART P OR AS AMENDED.
5. ANY OFF-SITE BORROW AND WASTE REQUIRED FOR THIS PROJECT MUST COME FROM A SITE WITH AN APPROVED EROSION CONTROL PLAN, A SITE REGULATED UNDER THE MINING ACT OF 1971, OR A LANDFILL REGULATED BY THE DIVISION OF SOLID WASTE MANAGEMENT. TRASH/DEBRIS FROM DEMOLITION ACTIVITIES MUST BE DISPOSED OF AT A FACILITY REGULATED BY THE DIVISION OF SOLID WASTE MANAGEMENT.

DEMOLITION/EXISTING CONDITIONS NOTES:

1. CONTRACTOR IS FULLY RESPONSIBLE FOR CONTACTING APPROPRIATE PARTIES AND ASSURING THAT EXISTING UTILITIES ARE LOCATED PRIOR TO BEGINNING CONSTRUCTION.
2. CONTRACTOR IS RESPONSIBLE FOR PLACING BARRICADES, USING FLAG MEN, ETC AS NECESSARY TO ENSURE THE SAFETY OF THE PUBLIC.
3. ALL PAVEMENT CUTS, CONCRETE OR ASPHALT, ARE TO BE PLACED IN ACCORDANCE WITH THE STANDARDS OF THE NORTH CAROLINA DEPARTMENT OF TRANSPORTATION AND THE TOWN OF WEDDINGTON.
4. SHORING WILL BE IN ACCORDANCE WITH OSHA TRENCHING STANDARDS PART 1926, SUBPART P OR AS AMENDED.
5. CONTRACTOR SHALL ESTABLISH EROSION CONTROL MEASURES PRIOR TO DEMOLITION OF EXISTING STRUCTURES.
6. CONTRACTOR SHALL ADHERE TO ALL LOCAL, STATE AND FEDERAL RULES AND REGULATIONS CONCERNING THE DEMOLITION AND REMOVAL OFFSITE OF ALL CONSTRUCTION DEBRIS.
7. CONTRACTOR SHALL COMPLETE DEMOLITION WORK IN AN EXPEDITIOUS AND TIMELY MANNER.
8. EXISTING STRUCTURES SHALL BE DEMOLISHED UNDER A SEPARATE DEMOLITION PERMIT OBTAINED BY THE DEVELOPER/OWNER.
9. ABANDONMENT OR REMOVAL OF EXISTING WELLS, SEPTIC SYSTEMS AND ASSOCIATED APPURTENANCES SHALL BE PERFORMED IN ACCORDANCE WITH REGULATORY GUIDELINES AND PROCEDURES ESTABLISHED BY THE NORTH CAROLINA DEPARTMENT OF NATURAL RESOURCES, AND ANY ASSOCIATED REGULATORY AGENCIES.
10. DEMOLITION CONTRACTOR, AND ASSOCIATED SUBCONTRACTORS, ARE RESPONSIBLE FOR CONTACTING AND COORDINATING WITH EACH AFFECTED UTILITY COMPANY PRIOR TO THE REMOVAL OR DISCONNECTION OF ANY EXISTING SERVICES ON SITE.
11. CONTRACTOR SHALL CONTACT ALL AFFECTED UTILITY COMPANIES PRIOR TO BEGINNING DEMOLITION.

GRADING NOTES:

1. ON-SITE BURIAL PITS REQUIRE AN ONSITE DEMOLITION LANDFILL PERMIT FROM THE ZONING ADMINISTRATOR.
2. ANY GRADING BEYOND THE DENUDED LIMITS SHOWN ON THE PLAN IS A VIOLATION OF THE TOWN/STATE EROSION CONTROL ORDINANCE AND IS SUBJECT TO FINE.
3. GRADING MORE THAN ONE ACRE WITHOUT AN APPROVED EROSION CONTROL PLAN IS A VIOLATION OF THE TOWN/STATE EROSION CONTROL ORDINANCE AND IS SUBJECT TO A FINE.
4. APPROVAL OF THIS PLAN IS NOT AN AUTHORIZATION TO GRADE ADJACENT PROPERTIES. WHEN FIELD CONDITIONS WARRANT OFF-SITE GRADING, PERMISSION SHALL BE OBTAINED BY CONTRACTOR FROM THE AFFECTED PROPERTY OWNERS.
5. IN ORDER TO ENSURE PROPER DRAINAGE, CONTRACTOR SHALL MAINTAIN A MINIMUM OF 0.5% SLOPE ON THE CURB.
6. PE SEALED SHOP DRAWINGS FOR RETAINING WALL MUST BE SUBMITTED TO TOWN ENGINEERING PRIOR TO CONSTRUCTION. ENSURE TIE BACKS ARE OUTSIDE RIGHT OF WAY.
8. THE CONTRACTOR SHALL MAINTAIN EACH STREAM, CREEK, OR BACKWASH CHANNEL IN AN UNOBSTRUCTED STATE AND SHALL REMOVE FROM THE CHANNEL AND BANKS OF THE STREAM ALL DEBRIS, LOGS, TIMBER, TRASH, JUNK AND OTHER ACCUMULATIONS.
9. NON-STANDARD ITEMS (IE: PAVERS, STAMPED CONCRETE, IRRIGATION SYSTEMS, ETC.) IN THE RIGHT-OF-WAY REQUIRE A RIGHT-OF-WAY ENCROACHMENT AGREEMENT WITH THE (NORTH CAROLINA DEPARTMENT OF TRANSPORTATION) BEFORE INSTALLATION.
10. CONTRACTOR SHALL CONTACT INSPECTOR 48 HOURS BEFORE CONSTRUCTION.
11. THE LOCAL ENGINEERING DEPARTMENT HAS NOT REVIEWED AND DOES NOT ASSUME RESPONSIBILITY FOR THE STRUCTURAL STABILITY OF ANY EXISTING OR PROPOSED RETAINING WALLS ON THE SITE. DESIGN OF ALL RETAINING WALLS IS TO BE PER NC BUILDING CODE SECTION 1610.3. DETAILED RETAINING WALL DESIGN DRAWINGS, SEALED BY A NC LICENSED ENGINEER. UPON COMPLETION OF WALL, A NC LICENSED ENGINEER WILL SUBMIT A SEALED LETTER TO WK DICKSON THAT RETAINING WALLS WERE CONSTRUCTED PER THE ENGINEERING DRAWINGS.
12. CONTRACTOR SHALL NOT GRADE WITHIN THE 100 YR FEMA FLOOD LINE.

TOWN OF WEDDINGTON GENERAL NOTES

1. STREET CONSTRUCTION MATERIALS AND CONSTRUCTION STANDARDS SHALL MEET N.C. DEPARTMENT OF TRANSPORTATION STANDARD SPECIFICATIONS FOR ROADS AND STRUCTURES, AND ROADWAY STANDARD DRAWINGS AS REVISED JANUARY 2012 (AND AS SUBSEQUENTLY AMENDED), EXCEPT WHERE TOWN OF WEDDINGTON STANDARDS ARE MORE STRINGENT.
2. ALL EROSION CONTROL DEVICES SHALL BE CONSTRUCTED AND MAINTAINED IN ACCORDANCE MOST CURRENT NCDENR AND UNION COUNTY STANDARDS. EROSION CONTROL MEASURES SHALL BE REMOVED AT PROJECT COMPLETION WHEN DEEMED NO LONGER NECESSARY BY THE ENGINEER. ALL GRADED AREAS NOT UNDER PAVEMENT AND WITHIN THE RIGHT-OF-WAY OR EASEMENTS SHALL BE PREPARED, FERTILIZED AND LIMED, SEEDED, AND MULCHED IMMEDIATELY UPON COMPLETION OF CONSTRUCTION.
3. ALL DRAINAGE STRUCTURES AND PIPE SHALL CONFORM TO NCDOT STANDARDS AND SPECIFICATIONS.
4. IF REQUIRED BY THE TOWN, COMPACTION TEST SHALL BE MADE BY AN INDEPENDENT TESTING LAB AT THE OWNER'S EXPENSE.
5. PROOF ROLLING OF STREET SUBGRADE AND AGGREGATE BASE MATERIAL SHALL BE PREFORMED BY THE CONTRACTOR IN THE PRESENCE OF THE OWNER'S ENGINEER USING AN OVER LOADED (ON-SITE) TRIAXLE DUMP WITH 22-25 TONS OF STONE, THIRD AXLE LIFTED. IF RAIN OCCURS BEFORE PLACING STONE ON SUBGRADE THAT HAS BEEN PROOFROLLED, THE SUBGRADE AND STONE BASE MUST BE PROOFROLLED AGAIN. THE ENGINEER SHALL PROVIDE WRITTEN VERIFICATION TO THE TOWN THAT THE SUBGRADE AND AGGREGATE BASE MATERIAL MEET THE DENSITY REQUIREMENTS AS SPECIFIED. FAILURE TO PROVIDE ENGINEER'S VERIFICATION OF THE SUBGRADE AND STONE BASE COURSE COMPACTION COULD RESULT IN DELAY OF FINAL ACCEPTANCE OF THE DEVELOPMENT BY THE TOWN.
6. THE FINAL LIFT OF ASPHALT PAVEMENT SHALL NOT BE PLACED UNTIL AFTER 80% OF HOME SITES ARE DEVELOPED. THE FINAL LIFT OF PAVEMENT SHALL NOT BE PLACED FOR STREETS THAT WILL BE USED TO ACCESS FUTURE PHASED UNTIL THOSE PHASES REACH 80% BUILD-OUT.
7. FOR ROADS THAT ARE TO BE PRIVATELY MAINTAINED, A REPRESENTATIVE OF THE TOWN MUST BE PRESENT FOR ALL PROOFROLLING AND ASPHALT PAVING OPERATIONS.
8. PRIOR TO FINAL ACCEPTANCE, THE DEVELOPER SHALL BE RESPONSIBLE FOR CORRECTING ALL PROBLEMS ASSOCIATED WITH THE PROJECT, INCLUDING THOSE ITEMS NOT NECESSARILY COVERED BY THE PLANS, TO INSURE THE SATISFACTORY COMPLETION OF THE TOTAL PROJECT.
9. DEVELOPER AND HOA SHALL MAINTAIN PERMANENT MAINTENANCE ON BUFFER AREAS PER TOWN OF WEDDINGTON'S STANDARDS.
10. BLASTING PER SEC. 46-79 OF TOWN OF WEDDINGTON'S STANDARDS.

WK DICKSON
community infrastructure consultants

MATERIAL/STREET/SIDEWALK NOTES:

1. ALL WORK AND MATERIALS SHALL CONFORM TO THE LATEST EDITION OF THE NORTH CAROLINA DEPARTMENT OF TRANSPORTATION (NCDOT) STANDARD SPECIFICATIONS FOR ROADS AND STRUCTURES UNLESS OTHERWISE SPECIFIED IN THIS MANUAL.
2. ALL ASPHALT CUTS SHALL BE MADE WITH A SAW WHEN PREPARING STREET SURFACES FOR PATCHING OR WIDENING STRIPS.
3. PAPER JOINTS SHALL BE USED TO SEAL THE ENDS OF AN ASPHALT POUR SO THAT FUTURE EXTENSIONS CAN BE MADE WITHOUT CAUSING ROUGH JOINTS.
4. WHEN PLACING ASPHALT AGAINST EXISTING SURFACES, A STRAIGHT EDGE SHALL BE USED TO PREVENT "HUMPING" AT THAT LOCATION.
5. STONE SHALL BE PRIMED IF PAVING IS NOT COMPLETE WITHIN SEVEN DAYS FOLLOWING STONE BASE APPROVAL.
6. SURFACES SHALL BE TACKED WHEN ASPHALT IS BEING PLACED OVER EXISTING ASPHALT STREETS OR ADJOINING CONCRETE, STORM DRAIN AND SANITARY SEWER STRUCTURES.
7. IN ROLLING AND HILLY TERRAINS, SWEEPING OF THE STONE BASE AND/OR APPLICATION OF A TACK COAT MAY BE REQUIRED NEAR INTERSECTIONS. THESE REQUIREMENTS WILL BE ESTABLISHED BY THE INSPECTOR AND BASED ON FIELD CONDITIONS.
8. ALL CONCRETE SHALL HAVE A MINIMUM COMPRESSIVE STRENGTH OF 3600 PSI AT 28 DAYS. THE CONTRACTOR SHALL PREPARE CONCRETE TEST CYLINDERS IN ACCORDANCE WITH SECTION 1000 OF THE NCDOT STANDARD SPECIFICATIONS AT THE DIRECTION OF THE PROJECT INSPECTOR. THE CONTRACTOR SHALL FURNISH ALL EQUIPMENT AND CYLINDER MOLDS. IT SHALL BE THE RESPONSIBILITY OF THE CONTRACTOR TO PROTECT THE CYLINDERS UNTIL SUCH TIME AS THEY ARE TRANSPORTED FOR TESTING. AN INDEPENDENT TESTING LAB SHALL PERFORM TESTING FOR PROJECTS, AT NO COST TO THE TOWN/STATE. THE CONTRACTOR SHALL PROVIDE EQUIPMENT AND PERFORM TESTS ON CONCRETE FOR A MAXIMUM SLUMP AND AIR CONTENT AS DEFINED IN SECTION 1000 OF THE NCDOT STANDARD SPECIFICATIONS. THESE TESTS SHALL BE PERFORMED AT A FREQUENCY ESTABLISHED BY THE INSPECTOR. THE CONTRACTOR SHALL REMOVE MATERIALS FAILING TO MEET SPECIFICATIONS.
9. ALL BACKFILL SHALL BE NON-PLASTIC IN NATURE, FREE FROM ROOTS, VEGETATIVE MATTER, WASTE, CONSTRUCTION MATERIAL OR OTHER OBJECTIONABLE MATERIAL. SAID MATERIAL SHALL BE CAPABLE OF BEING COMPACTED BY MECHANICAL MEANS AND THE MATERIAL SHALL HAVE NO TENDENCY TO FLOW OR BEHAVE IN A PLASTIC MANNER UNDER THE TAMPING BLOWS OR PROOF ROLLING.
10. MATERIALS DEEMED BY THE INSPECTOR AS UNSUITABLE FOR BACKFILL PURPOSES SHALL BE REMOVED AND REPLACED WITH SELECT BACKFILL MATERIAL.
11. CONTRACTOR SHALL FOLLOW NCDOT STANDARDS AND/OR SPECIFICATION FOR HANDLING, STORING, AND INSTALLATION OF ALL CONSTRUCTION MATERIALS.
12. CONTRACTOR SHALL FOLLOW NCDOT STANDARDS AND/OR SPECIFICATION FOR SOIL AND/OR STONE COMPACTIONS REQUIREMENTS.
13. ALL EXCESS CONCRETE ON THE FRONT EDGE (LIP) OF GUTTER SHALL BE REMOVED WHEN CURB AND GUTTER IS POURED WITH A MACHINE.
14. THE CONTRACTOR SHALL MAINTAIN TWO-WAY TRAFFIC AT ALL TIMES WHEN WORKING WITHIN EXISTING STREETS. THE CONTRACTOR SHALL PLACE AND MAINTAIN SIGNS, DANGER LIGHTS, BARRICADES, AND FURNISH WATCHMEN OR FLAGMEN TO DIRECT TRAFFIC IN ACCORDANCE WITH NCDOT STANDARDS
15. THE CONTRACTOR SHALL DO THAT WHICH IS NECESSARY TO CONTROL EROSION AND TO PREVENT SEDIMENTATION DAMAGE TO ALL ADJACENT PROPERTIES AND STREAMS IN ACCORDANCE WITH THE APPROPRIATE CITY/COUNTY SEDIMENT AND EROSION CONTROL ORDINANCE.
16. SIGHT TRIANGLES SHOWN ARE THE MINIMUM REQUIRED.
17. NON-STANDARD ITEMS (IE: PAVERS, STAMPED CONCRETE, IRRIGATION SYSTEMS, ETC.) IN THE RIGHT-OF-WAY REQUIRE APPROVAL FROM TOWN OF WEDDINGTON AND NORTH CAROLINA DEPARTMENT OF TRANSPORTATION BEFORE INSTALLATION.
18. CONSTRUCTION SHALL BE IN STRICT COMPLIANCE WITH SPECIFICATION, CONSTRUCTION DOCUMENTS, TOWN OF WEDDINGTON STANDARDS, NCDEQ STANDARDS, AND NCDOT STANDARDS.

EROSION CONTROL NOTES:

1. ALL EROSION CONTROL MEASURES SHALL BE IN STRICT ACCORDANCE WITH LOCAL AND/OR STATE STANDARDS.
2. THE CONTRACTOR SHALL DILIGENTLY AND CONTINUOUSLY MAINTAIN ALL EROSION CONTROL DEVICES AND STRUCTURES TO MINIMIZE SEDIMENTATION. THE CONTRACTOR SHALL MAINTAIN CLOSE CONTACT WITH INSPECTOR SO THAT PERIODIC INSPECTIONS CAN BE CONDUCTED AT APPROPRIATE STAGES OF CONSTRUCTION.
3. THE TOTAL DENUDED AREA IS 24.88 ACRES.
4. THE TOTAL SITE ACREAGE IS 41.53 ACRES.
5. FINAL LOCATION OF SILT FENCE, DIVERSION DITCHES, ETC. SHALL BE ADJUSTED IN THE FIELD BY CONTRACTOR BASED ON SITE CONDITIONS AND INSPECTOR'S RECOMMENDATIONS.
6. ADDITIONAL MEASURES TO CONTROL EROSION AND SEDIMENT MAY BE REQUIRED BY A REPRESENTATIVE OF NCDEQ.
7. THE SITE SHALL BE GRADED DURING CONSTRUCTION TO ALLOW ALL STORM WATER TO DRAIN TO EROSION CONTROL DEVICES.
8. ALL INLETS AND CATCH BASINS SHOULD BE PROTECTED AND MAINTAINED BY SILT SACK OR EQUAL INLET PROTECTION IN ADDITION TO THE MEASURES SHOWN.
9. AN EROSION AND SEDIMENT CONTROL PLAN REQUIRED FOR ANY OFF-SITE BORROW OR WASTE AREA ASSOCIATED WITH THIS SITE WILL BE CONSIDERED THE RESPONSIBILITY OF THE PERSON(S) FINANCIALLY RESPONSIBLE FOR THE LAND DISTURBING ACTIVITY. THE DELEGATION OF THIS RESPONSIBILITY TO THE CONTRACTOR IS CONSIDERED AN OWNER/CONTRACTOR AGREEMENT.
10. DRIVEWAY PERMIT FOR CONSTRUCTION ENTRANCES IN NCDOT RIGHT OF WAY MUST BE PRESENTED AT PRE-CONSTRUCTION MEETING.
11. FOLLOWING EVERY RAINFALL EVENT GREATER THAN 0.5 INCHES, CONTRACTOR SHALL INSPECT AND REPAIR, AS NECESSARY, ALL DAMAGED EROSION CONTROL MEASURES. THIS INCLUDES BUT IS NOT LIMITED TO SILT FENCE, CONSTRUCTION ENTRANCES, SILT FENCE OUTLET DEVICES, AND INLET PROTECTION. TYPICAL MAINTENANCE INCLUDES CHECKING FOR STRUCTURAL DEFICIENCIES SUCH AS UNDERMINING AND DEBRIS BUILDUP AROUND SILT FENCE.
12. CONTRACTOR SHALL TAKE ALL PRACTICAL MEASURES TO MINIMIZE DISTURBED AREA AND TO ENSURE THAT THE DISTURBED AREAS ARE STABILIZED WITH VEGETATION AS SOON AS POSSIBLE.
13. LOCATE AREAS DEDICATED FOR MANAGEMENT OF LAND CLEARING AND DEMOLITION DEBRIS, CONSTRUCTION AND DOMESTIC WASTE, AND HAZARDOUS OR TOXIC WASTE AT LEAST 50 FEET AWAY FROM STORM DRAIN INLETS AND SURFACE WATERS UNLESS IT CAN BE SHOWN THAT NO ALTERNATIVES ARE REASONABLY AVAILABLE.
14. LOCATE EARTHEN-MATERIAL STOCK PILE AREAS AT LEAST 50 FEET AWAY FROM STORM DRAIN INLETS AND SURFACE WATERS UNLESS IT CAN BE SHOWN THAT NO OTHER ALTERNATIVES ARE REASONABLY AVAILABLE.
15. SILT FENCE SHALL BE INSTALLED AT LEAST 5 FEET OFF THE TOE OF ALL FILL SLOPES.
16. SILT FENCE SHALL BE INSTALLED AT LEAST 10 FEET OFF THE TOE OF ALL FILL SLOPES GREATER THAN 10 FEET IN HEIGHT.

EROSION CONTROL MAINTENANCE PLAN

1. ALL SEDIMENT AND EROSION CONTROL DEVICES SHALL BE INSPECTED EVERY SEVEN (7) DAYS OR AFTER EACH RAINFALL OCCURRENCE THAT EXCEEDS ONE-HALF (0.5) INCH.
2. ALL EROSION CONTROL DEVICES SHALL BE PROPERLY MAINTAINED DURING ALL PHASES OF CONSTRUCTION UNTIL THE COMPLETION OF ALL CONSTRUCTION ACTIVITIES AND ALL DISTURBED AREAS HAVE BEEN STABILIZED. ADDITIONAL CONTROL DEVICES MAY BE REQUIRED DURING CONSTRUCTION IN ORDER TO CONTROL EROSION AND/OR OFFSITE SEDIMENTATION. ALL TEMPORARY CONTROL DEVICES SHALL BE REMOVED ONCE CONSTRUCTION IS COMPLETE AND THE SITE IS STABILIZED.
3. SEDIMENT WILL BE REMOVED FROM BEHIND THE SILT FENCE WHEN IT BECOMES ABOUT 0.5 FEET DEEP AT THE FENCE. THE SEDIMENT FENCE WILL BE REPAIRED OR REPLACED AS NECESSARY TO MAINTAIN A BARRIER.
4. ALL AREAS WILL BE FERTILIZED, RESEEDED AS NECESSARY, AND MULCHED ACCORDING TO SPECIFICATIONS IN THE VEGETATIVE PLAN TO MAINTAIN A VIGOROUS, DENSE VEGETATIVE COVER.
5. STONE CONSTRUCTION ENTRANCE TO BE CLEANED WHEN SEDIMENT ACCUMULATIONS ARE VISIBLE OR SEDIMENT IS TRACKED ON TO THE PAVEMENT. THE FIRST 50' OF THE ENTRANCE ADJACENT TO THE ROAD WILL BE PERIODICALLY TOP DRESSED WITH 2 INCHES OF #4 STONE TO MAINTAIN A 6 INCH DEPTH. THE REMAINDER OF THE CONSTRUCTION ENTRANCE WILL BE CLASS A STONE. THE CONTRACTOR SHALL DAILY REMOVE MUD/SOIL FROM PAVEMENT, AS MAY BE REQUIRED.
6. CONTRACTOR SHALL TAKE ADDITIONAL STEP AS NEEDED TO ENSURE REESTABLISHMENT OF VEGETATION IS ACHIEVED IN WETLAND AREAS ON A CASE BY CASE BASIS.

PERMANENT SEEDING SPECIFICATION

3:1 SLOPES OR FLATTER:

1. APPLY AGRICULTURAL LIME AT THE RATE OF **75 LBS/1000 S.F.
2. APPLY COMMERCIAL FERTILIZER AT THE RATE OF 48 LBS/1000 S.F. FOR 5-10-10 FERTILIZER, 24 LBS/1000 S.F. FOR 10-20-20 FERTILIZER, OR 20 LBS/1000 S.F. FOR 18-24-6 FERTILIZER.
3. SEED IN ACCORDANCE WITH THE FOLLOWING SCHEDULE AND APPLICATION RATES:

DATE:	TYPE:	PLANTING RATE:
AUG. 15 – NOV. 1	TALL FESCUE	300 LBS/AC OR 7 LBS/1000 S.F.
	RYE GRAIN	120 LBS/AC OR 3 LBS/1000 S.F.
NOV. 1 – MAR. 1*	TALL FESCUE AND	300 LBS/AC OR 7 LBS/1000 S.F.
	ABRUZZI RYE	25 LBS/AC OR 1/2 LB/1000 S.F.
MAR. 1 – APR. 15	TALL FESCUE	300 LBS/AC OR 7 LBS/1000 S.F.
APR. 15 – JUL. 30	HULLED COMMON BERMUDA GRASS	25 LBS/AC OR 1/2 LB/1000 S.F.
JUL. 1 – AUG. 15	TALL FESCUE AND	300 LBS/AC OR 7 LBS/1000 S.F.
	BROWN TOP MILLET OR SORGHUM SUDAN HYBRIDS	35 LBS/AC OR 3/4 LB/1000 S.F.
		30 LBS/AC OR 3/4 LB/1000 S.F.

4. MULCH WITH STRAW APPLIED AT THE RATE OF 95 LBS/1000 S.F.

* HEAVILY MULCHED DURING JANUARY – MARCH PERIOD.
** CONTRACTOR MAY OBTAIN SOIL TEST TO DETERMINE AMOUNT OF LIME REQUIRED TO OBTAIN A pH RANGE OF 6.5 TO 7.0.
*** SEED TYPE, RATES AND/OR SOIL AMENDMENTS SPECIFIED ABOVE MAY BE MODIFIED AND/OR ELIMINATED IF REQUIRED BY OTHER LOCAL, STATE OR FEDERAL AGENCIES (EG. NRCS, NC COOPERATIVE EXTENSION OFFICE, ETC.). PRIOR TO MODIFICATIONS OR ELIMINATIONS, CONTRACTOR SHALL SUBMIT WRITTEN DOCUMENTATION SUPPORTING THE REQUEST FOR APPROVAL PRIOR TO MAKING MODIFICATION.

SLOPES GREATER THAN 3:1

1. APPLY AGRICULTURAL LIME AT A RATE OF **90 LBS/1000 S.F.
2. APPLY COMMERCIAL FERTILIZER AT THE RATE OF 48 LBS/1000 S.F. FOR 5-10-10 FERTILIZER, 24 LBS/1000 S.F. FOR 10-20-20 FERTILIZER, OR 20 LBS/1000 S.F. FOR 18-24-6 FERTILIZER.
3. SEED IN ACCORDANCE WITH THE FOLLOWING SCHEDULE AND APPLICATION RATES:

DATE:	TYPE:	PLANTING RATE:
MAR. – JUN. 1	SERICEA LESPEDEZA	50 LBS/AC OR 1 1/2 LBS/1000 S.F.
	RYE GRAIN (SCARIFIED) AND	25 LBS/AC OR 3/4 LBS/1000 S.F.
MAR. – APR. 1	ADD TALL FESCUE	150 LBS/AC OR 3 1/2 LBS/1000 S.F.
JUN. – SEPT. 1***	TALL FESCUE AND	120 LBS/AC OR 2 1/2 LBS/1000 S.F.
	BROWN TOP MILLET OR SORGHUM SUDAN HYBRIDS	35 LBS/AC OR 3/4 LB/1000 S.F.
		30 LBS/AC OR 3/4 LB/1000 S.F.
SEPT. – MAR. 1	SERICEA LESPEDEZA (UNHULLED – UNSCARIFIED)	70 LBS/AC OR 1 3/4 LBS/1000 S.F.
	TALL FESCUE	120 LBS/AC OR 2 1/2 LBS/1000 S.F.
	MILLET OR SUDAN	20 LBS/AC OR 1/2 LB/1000 S.F.

4. MULCH APPLIED AT THE RATE OF 95 LBS/1000 S.F. AND ANCHOR WITH ASPHALT EMULSION TACK COAT APPLIED AT THE RATE OF 10-15 GAL/1000 S.F. OR 450 GAL/AC.

* TEMPORARY RESEED SEPT. 1 AT RECOMMENDED RATES.
** CONTRACTOR MAY OBTAIN SOIL TEST TO DETERMINE AMOUNT OF LIME REQUIRED TO OBTAIN A pH RANGE OF 6.5 TO 7.0.
*** SEED TYPE, RATES AND/OR SOIL AMENDMANTS SPECIFIED ABOVE MAY BE MODIFIED AND/OR ELIMINATED IF REQUIRED BY OTHER LOCAL, STATE OR FEDERAL AGENCIES (EG. NRCS, NC COOPERATIVE EXTENSION OFFICE, ETC.). PRIOR TO MODIFICATIONS OR ELIMINATIONS, CONTRACTOR SHALL SUBMIT WRITTEN DOCUMENTATION SUPPORTING THE REQUEST FOR APPROVAL PRIOR TO MAKING MODIFICATION.

PERMANENT SEEDING NOTES

1. PERMANENT SEEDING, SODDING, OR OTHER MEANS OF STABILIZATION ARE REQUIRED WHEN ALL CONSTRUCTION WORK IS COMPLETED ACCORDING TO THE "SEEDING STABILIZATION TIMEFRAMES" CHART.
2. A NORTH CAROLINA DEPARTMENT OF AGRICULTURE SOILS TEST (OR EQUAL) SHOULD BE OBTAINED FOR ALL AREAS TO BE SEEDED, SPRIGGED, SODDED OR PLANTED. RECOMMENDED FERTILIZER AND pH ADJUSTING PRODUCTS SHOULD BE INCORPORATED TO THE SOIL.
3. USE A SEEDING MIX OF NON-INVASIVE, NATIVE SPECIES THAT WILL EVENTUALLY PROVIDE A PERMANENT GROUNDCOVER.
4. IMMEDIATE VEGETATIVE COVER WILL ALWAYS REQUIRE ADDITIONAL FERTILIZATION, SOIL TESTS, OVERSEEDING AND MAINTENANCE UNTIL PERMANENT VEGETATIVE COVER IS ESTABLISHED.

SEEDBED PREPARATION

1. CHISEL COMPACTED AREAS AND SPREAD TOPSOIL 3 INCHES DEEP OVER ADVERSE SOIL CONDITIONS, IF AVAILABLE.
2. RIP THE ENTIRE AREA TO 6 INCHES DEPTH.
3. APPLY AGRICULTURAL LIME, FERTILIZER, AND SUPER PHOSPHATE UNIFORMLY AND MIX WITH SOIL (SEE SEED SCHEDULE). DO NOT USE LIME OR FERTILIZER ON STREAM BANKS OR IN WETLAND AREAS. MULCH DOES NOT NEED TO BE USED IN WETLAND AREAS.
4. SEED ON A FRESHLY PREPARED SEEDBED AND COVER SEED LIGHTLY WITH SEEDING EQUIPMENT OR CULTIPACK AFTER SEEDING.
5. MULCH IMMEDIATELY AFTER SEEDING AND ANCHOR MULCH.
6. INSPECT ALL SEEDED AREAS AND MAKE NECESSARY REPAIRS OR RESEEDINGS WITHIN THE PLANTING SEASON, IF POSSIBLE. IF STAND SHOULD BE OVER 60% DAMAGED, REESTABLISH FOLLOWING ORIGINAL LIME, FERTILIZER AND SEEDING RATES.
7. CONSULT CONSERVATION INSPECTOR ON MAINTENANCE TREATMENT AND FERTILIZATION AFTER PERMANENT COVER IS ESTABLISHED.

SEEDING STABILIZATION TIMEFRAMES

SITE AREA DESCRIPTION	STABILIZATION	TIMEFRAME EXCEPTIONS
PERIMETER DIKES, SWALES, DITCHES AND SLOPES	7 DAYS	NONE
HIGH QUALITY WATER (HQW) ZONES	7 DAYS	NONE
SLOPES STEEPER THAN 3:1	7 DAYS	IF SLOPES ARE 10' OR LESS IN LENGTH AND ARE NOT STEEPER THAN 2:1, 14 DAYS ARE ALLOWED.
SLOPES 3:1 OR FLATTER	14 DAYS	7 DAYS FOR SLOPES GREATER THAN 50' IN LENGTH
ALL OTHER AREAS WITH SLOPES FLATTER THAN 4:1	14 DAYS	NONE, EXCEPT FOR PERMETERS AND HQW ZONES

CONSTRUCTION SEQUENCE

CONTRACTOR SHALL:

1. OBTAIN GRADING/EROSION CONTROL PLAN APPROVAL FROM NCDEQ.
2. SET UP AN ON-SITE PRECONSTRUCTION CONFERENCE WITH EROSION CONTROL INSPECTOR FROM NCDEQ TO DISCUSS EROSION CONTROL MEASURES. FAILURE TO SCHEDULE SUCH CONFERENCE 48 HOURS PRIOR TO ANY LAND DISTURBING ACTIVITY IS A VIOLATION AND IS SUBJECT TO A FINE.
3. INSTALL SILT FENCE, INLET PROTECTION, SEDIMENT BASINS, DIVERSION DITCHES, TREE PROTECTION, AND OTHER MEASURES AS SHOWN ON PLANS, CLEARING ONLY AS NECESSARY TO INSTALL THESE DEVICES.
4. INSTALL STORM DRAINAGE LINE I AND ASSOCIATED EARTHEN FILL. STABILIZE DISTURBED AREA.
5. COORDINATE WITH NCDEQ AND THE TOWN OF WEDDINGTON INSPECTOR TO OBTAIN APPROVAL THAT EROSION CONTROL MEASURES ARE INSTALLED CORRECTLY.
6. CLEAR AND GRUB SITE.
7. MAINTAIN ALL EROSION CONTROL MEASURES OUTLINED ON THE EROSION CONTROL PLANS, NOTES, AND DETAILS.
8. PROCEED WITH CONSTRUCTION.
9. STABILIZATION TIMEFRAMES APPLY TO ANY PERIOD OF INACTIVITY. SEE SEEDING STABILIZATION TIMEFRAMES.
10. ONCE SITE IS STABILIZED, COORDINATE WITH NCDEQ AND THE TOWN OF WEDDINGTON INSPECTOR TO OBTAIN APPROVAL TO REMOVE EROSION CONTROL MEASURES.

TEMPORARY SEEDING SPECIFICATION

TEMPORARY SEEDING RECOMMENDATIONS FOR LATE WINTER AND EARLY SPRING

SEEDING MIXTURE	RATE (LB/AC)
RYE (GRAIN)	120
ANNUAL LESPEDEZA (KOBE IN PIEDMONT AND COASTAL PLAIN, KOREAN IN MOUNTAINS)	50

OMIT ANNUAL LESPEDEZA WHEN DURATION OF TEMPORARY COVER IS NOT TO EXTEND BEYOND JUNE.

SEEDING DATES:
MOUNTAINS – ABOVE 2500 FEET, FEB. 15 – MAY 15
BELOW 2500 FEET, FEB. 1 – MAY 1
PIEDMONT – JAN. 1 – MAY 1
COASTAL PLAIN – DEC. 1 – APR. 15

SOIL AMENDMENTS:
FOLLOW RECOMMENDATIONS OF SOIL TESTS OR APPLY 2,000 LB/ACRE GROUND AGRICULTURAL LIMESTONE AND 750 LB/ACRE 10-10-10 FERTILIZER.

MULCH:
APPLY 4,000 LB/ACRE STRAW. ANCHOR STRAW BY TACKING WITH ASPHALT, NETTING, OR A MULCH ANCHORING TOOL. A DISK WITH BLADES SET NEARLY STRAIGHT CAN BE USED AS A MULCH ANCHORING TOOL.

MAINTENANCE:
RE-FERTILIZE IF GROWTH IS NOT FULLY ADEQUATE. RESEED, RE-FERTILIZE AND MULCH IMMEDIATELY FOLLOWING EROSION OR OTHER DAMAGE.

TEMPORARY SEEDING RECOMMENDATIONS FOR SUMMER

SEEDING MIXTURE	RATE (LB/AC)
GERMAN MILLET	40

IN THE PIEDMONT AND MOUNTAINS, A SMALL-STEMMED SUDANGRASS MAY BE SUBSTITUTED AT A RATE OF 50 LB/ACRE.

SEEDING DATES
MOUNTAINS – MAY 15 – AUG. 15
PIEDMONT – MAY 1

COPYRIGHT © W.K. DICKSON & CO., INC. ALL RIGHTS RESERVED. REPRODUCTION OR USE OF THE CONTENTS OF THIS DOCUMENT, ADDITIONS OR DELETIONS TO THIS DOCUMENT, IN WHOLE OR IN PART, WITHOUT WRITTEN CONSENT OF W.K. DICKSON & CO., INC., IS PROHIBITED. ONLY COPIES FROM THE ORIGINAL OF THIS DOCUMENT, MARKED WITH AN ORIGINAL SIGNATURE AND SEAL SHALL BE CONSIDERED TO BE VALID, TRUE COPIES.

STATE OF NORTH CAROLINA DEPT. OF TRANSPORTATION DIVISION OF HIGHWAYS RALEIGH, N.C. 1-12

ENGLISH STANDARD DRAWING FOR **CONCRETE CURB, GUTTER AND CURB & GUTTER**

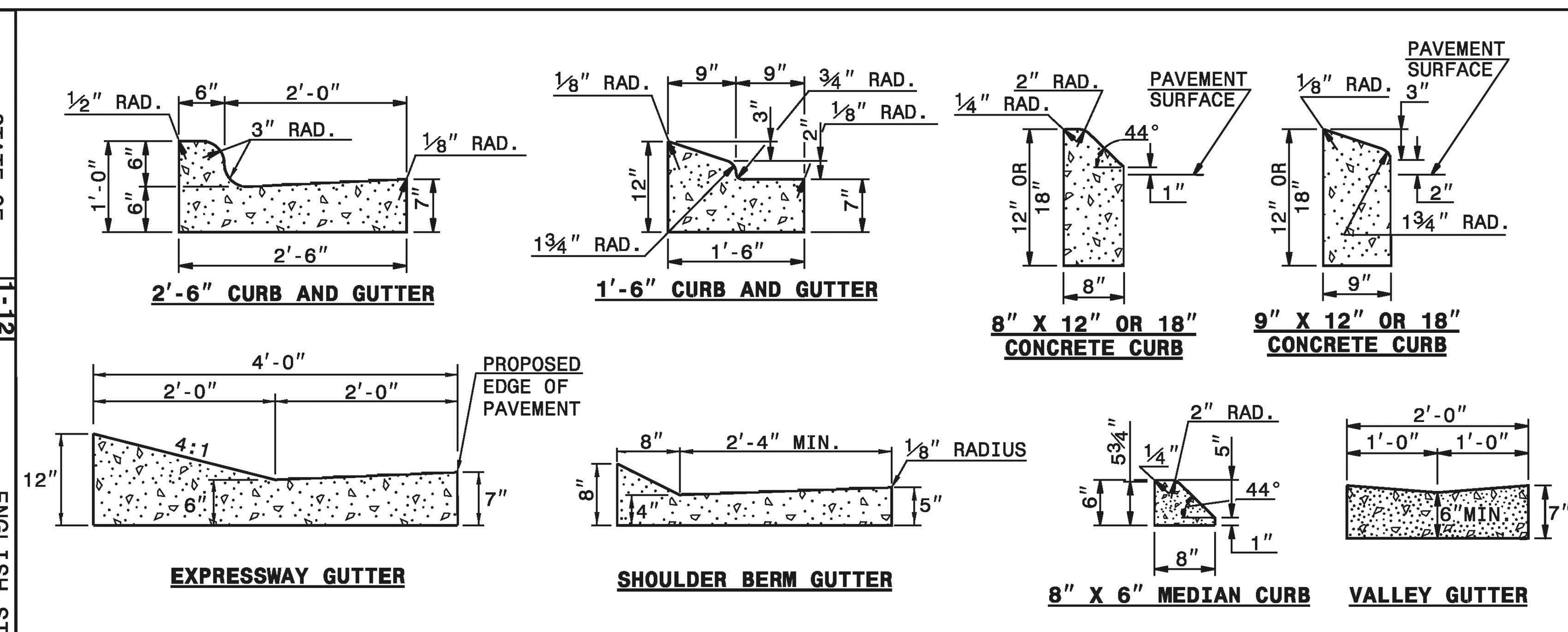

2'-6" CURB AND GUTTER

1'-6" CURB AND GUTTER

8" X 12" OR 18" CONCRETE CURB

9" X 12" OR 18" CONCRETE CURB

EXPRESSWAY GUTTER

SHOULDER BERM GUTTER

8" X 6" MEDIAN CURB

VALLEY GUTTER

SECTION VIEW OF CURBS OR CURBS AND GUTTERS

GENERAL NOTES:
- -PLACE CONTRACTION JOINTS AT 10' INTERVALS, EXCEPT THAT A 15' SPACING MAY BE USED WHEN A MACHINE IS USED OR WHEN SATISFACTORY SUPPORT FOR THE FACE FORM CAN BE OBTAINED WITHOUT THE USE OF TEMPLATES AT 10' INTERVALS.
- -JOINT SPACING MAY BE ALTERED IF REQUIRED BY THE ENGINEER.
- -CONTRACTION JOINTS MAY BE INSTALLED WITH THE USE OF TEMPLATES OR FORMED BY OTHER APPROVED METHODS. CONSTRUCT NON-TEMPLATE FORMED JOINTS A MIN. OF 1½" DEEP.
- -FILL ALL CONSTRUCTION JOINTS, EXCEPT IN 8"x6" MEDIAN CURB, WITH JOINT FILLER AND SEALER.
- -SPACE EXPANSION JOINTS AT 90' INTERVALS AND ADJACENT TO ALL RIGID OBJECTS.

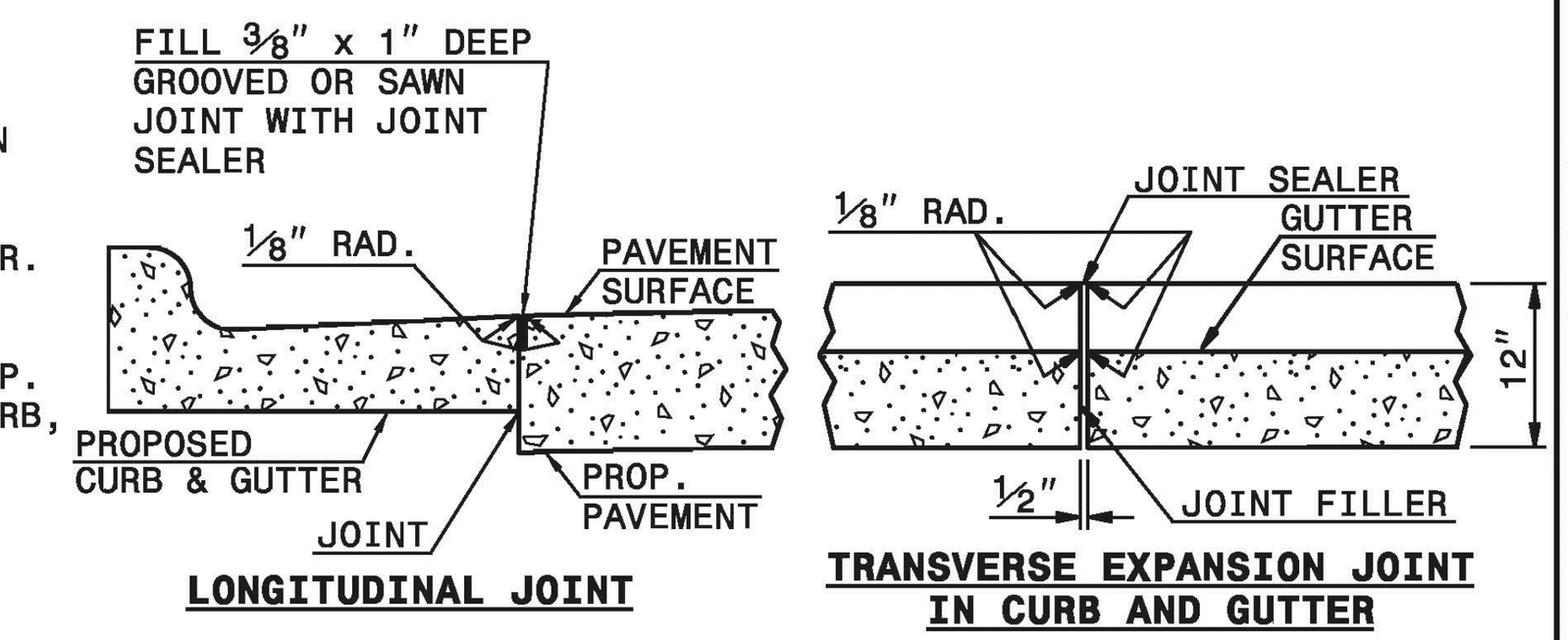

LONGITUDINAL JOINT

TRANSVERSE EXPANSION JOINT IN CURB AND GUTTER

SECTION VIEW OF JOINTS

SHEET 1 OF 3 846.01

STATE OF NORTH CAROLINA DEPT. OF TRANSPORTATION DIVISION OF HIGHWAYS RALEIGH, N.C. 1-12

ENGLISH STANDARD DRAWING FOR **CONCRETE CURB, GUTTER AND CURB & GUTTER**

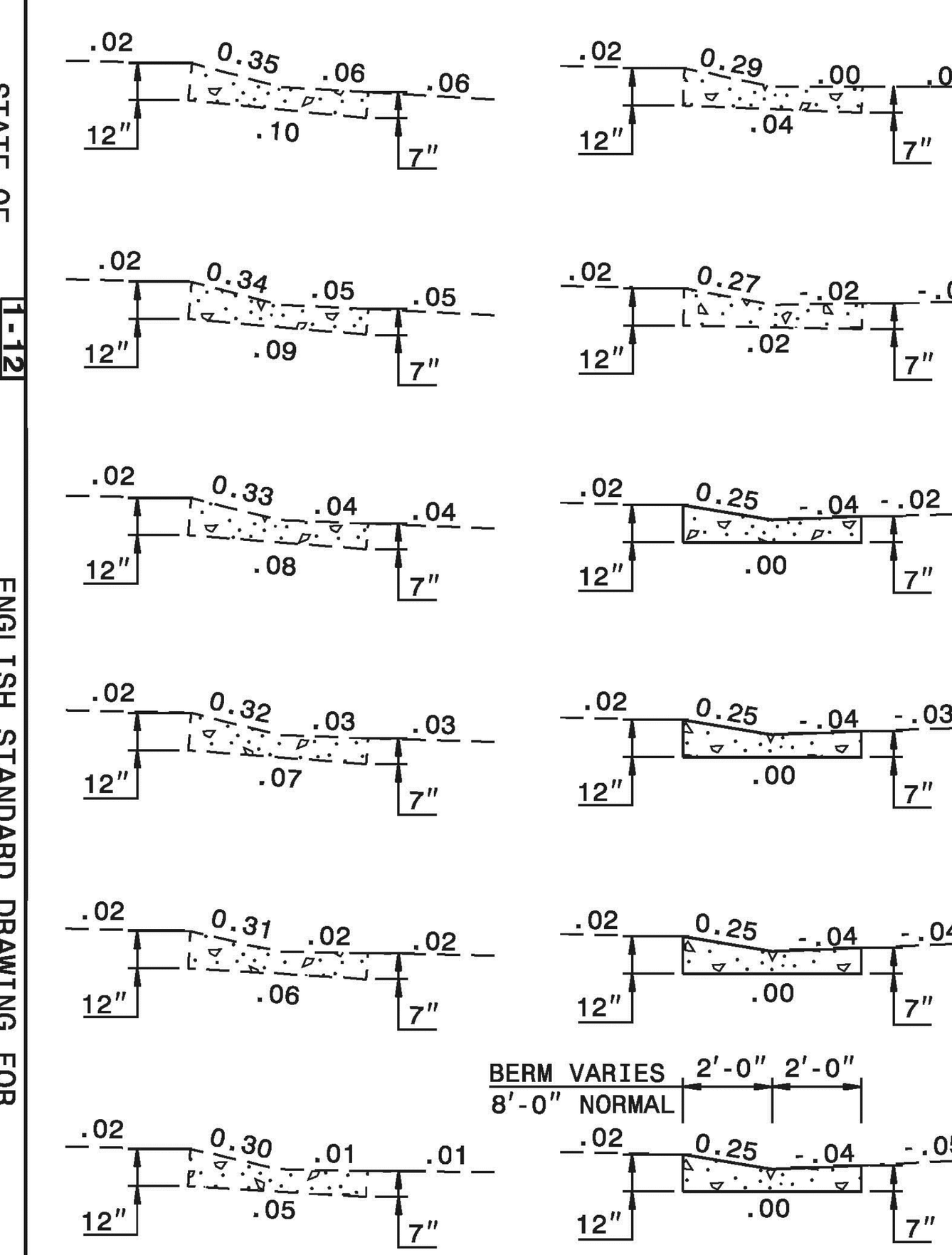

SECTION VIEWS OF EXPRESSWAY GUTTER IN SUPER ELEVATION

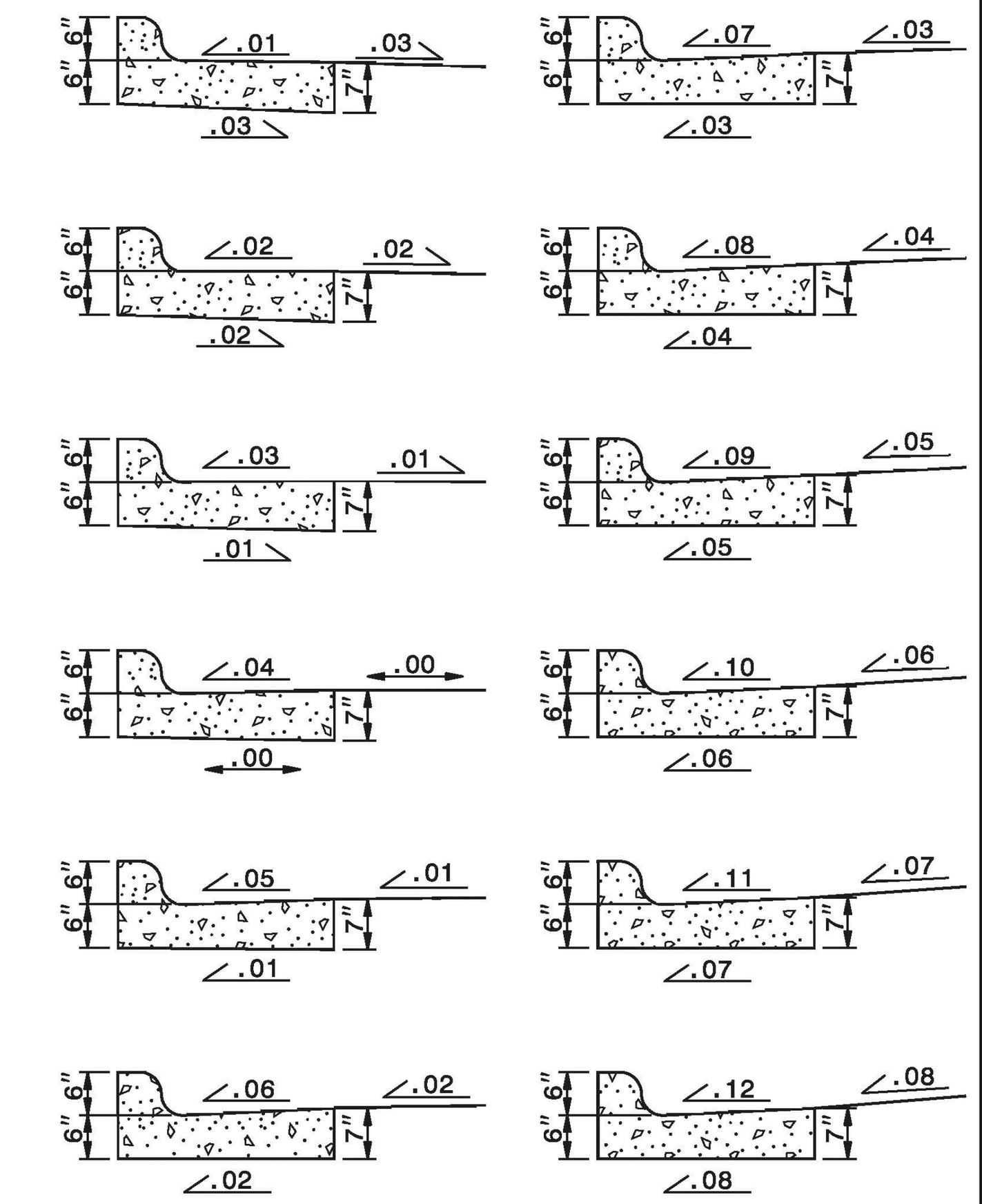

SECTION VIEWS OF 2'-6" CURB AND GUTTER SUPERELEVATION RATES

SHEET 2 OF 3 846.01

STATE OF NORTH CAROLINA DEPT. OF TRANSPORTATION DIVISION OF HIGHWAYS RALEIGH, N.C. 1-12

ENGLISH STANDARD DRAWING FOR **CURB RAMP** PROPOSED CURB AND GUTTER

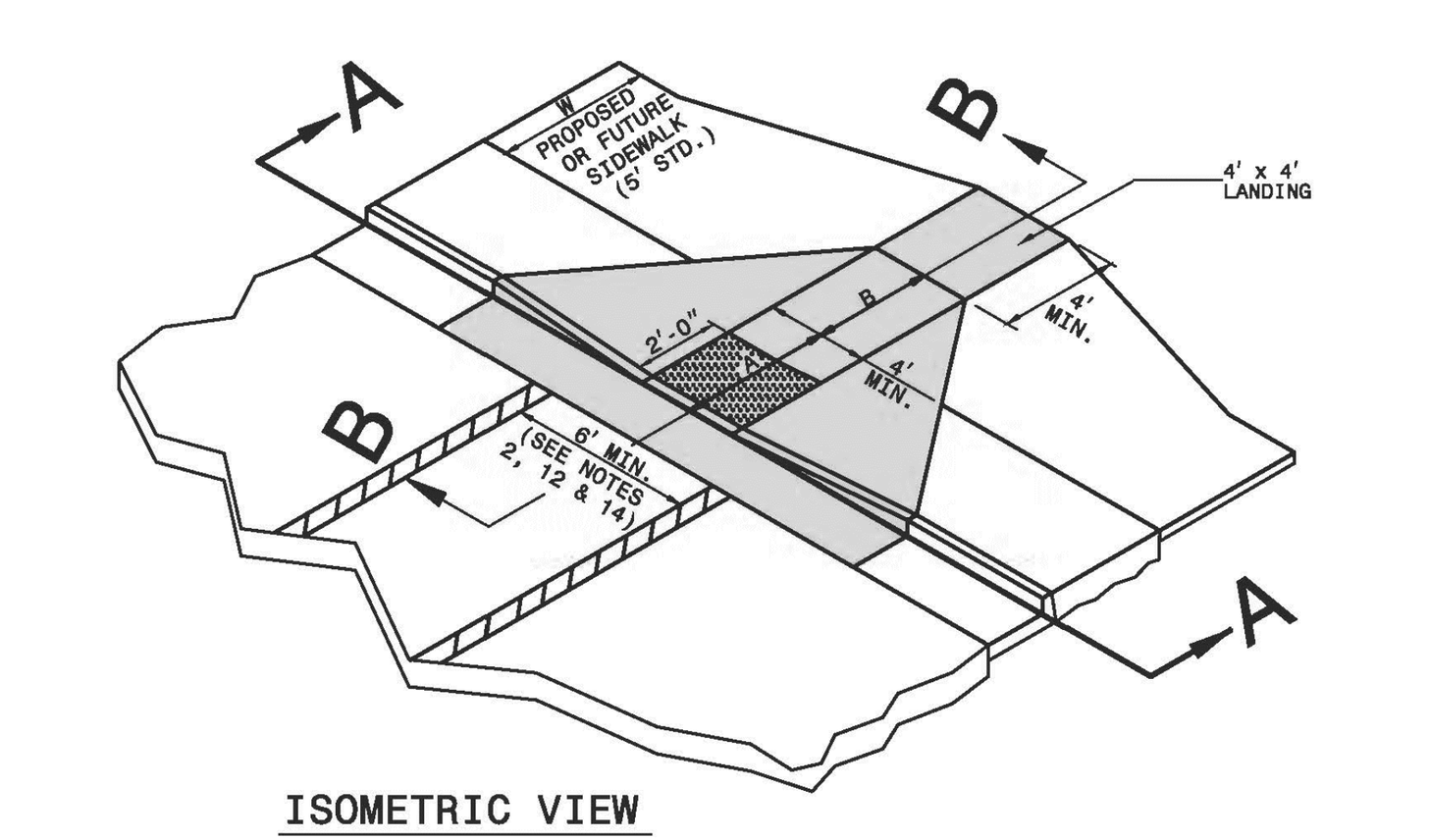

ISOMETRIC VIEW

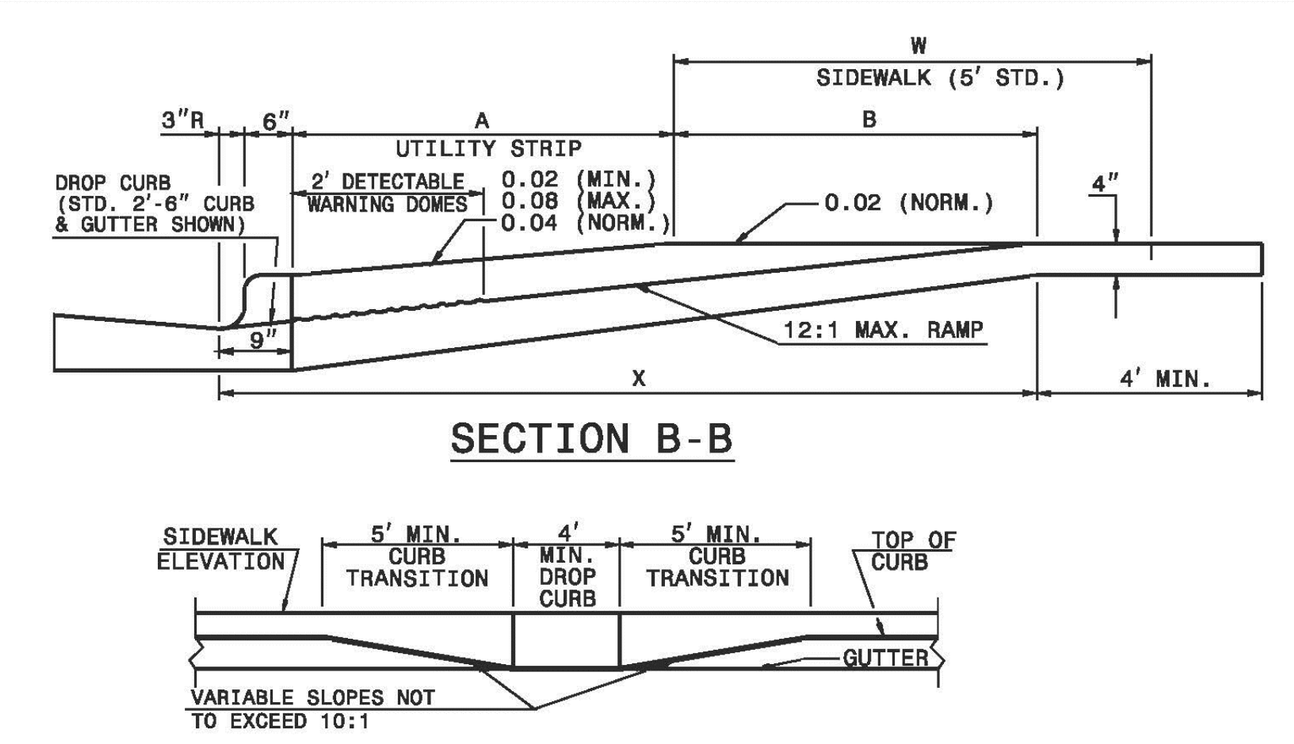

SECTION B-B

SECTION A-A

PAY LIMITS FOR CURB RAMP

NOTES:
1. DETECTABLE WARNING DOMES WILL COVER 2'-0" LENGTH AND FULL WIDTH OF THE RAMP FLOOR AS SHOWN ON THE DETAILS.
2. DETECTABLE WARNING DOMES WILL CONTRAST VISIBILITY WITH ADJOINING SURFACE, EITHER LIGHT-ON-DARK, OR DARK-ON-LIGHT SEQUENCE COVERING THE ENTIRE RAMP.

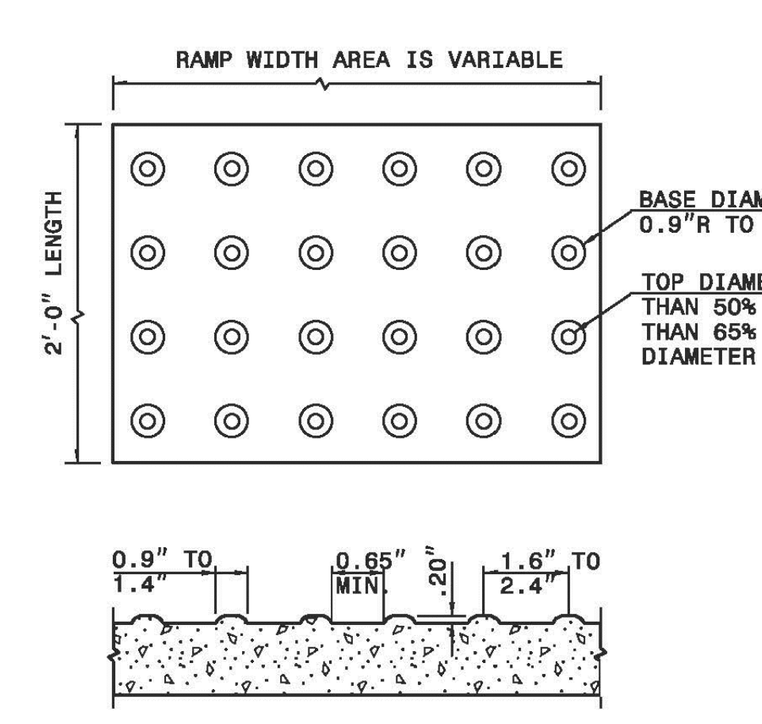

DETECTABLE WARNING DOMES

W	A	W+A+9"	X	B
5'	0.0'	5.8'	5.8'	5.0'*
6'	0.0'	6.8'	6.8'	6.0'**
7'	0.0'	7.8'	7.3'	6.5'**
8'	0.0'	8.8'	7.3'	6.5'**
5'	2.0'	7.8'	7.8'	5.0'
5'	2.5'	8.3'	8.1'	4.8'
5'	3.0'	8.8'	8.3'	4.4'
5'	3.5'	9.3'	8.4'	4.1'
5'	4.0'	9.8'	8.6'	3.8'
5'	4.5'	10.3'	8.7'	3.4'
5'	5.0'	10.8'	8.9'	3.1'

B = X-(A+9")
B = DISTANCE FROM FRONT EDGE OF SIDEWALK TO BACK POINT OF 12:1 (8.33%) SLOPE.
* BACK OF SIDEWALK DROP REQUIRED FOR ALL SIDEWALK SLOPES.
** BACK OF SIDEWALK DROP REQUIRED FOR SIDEWALK SLOPES 0.04.

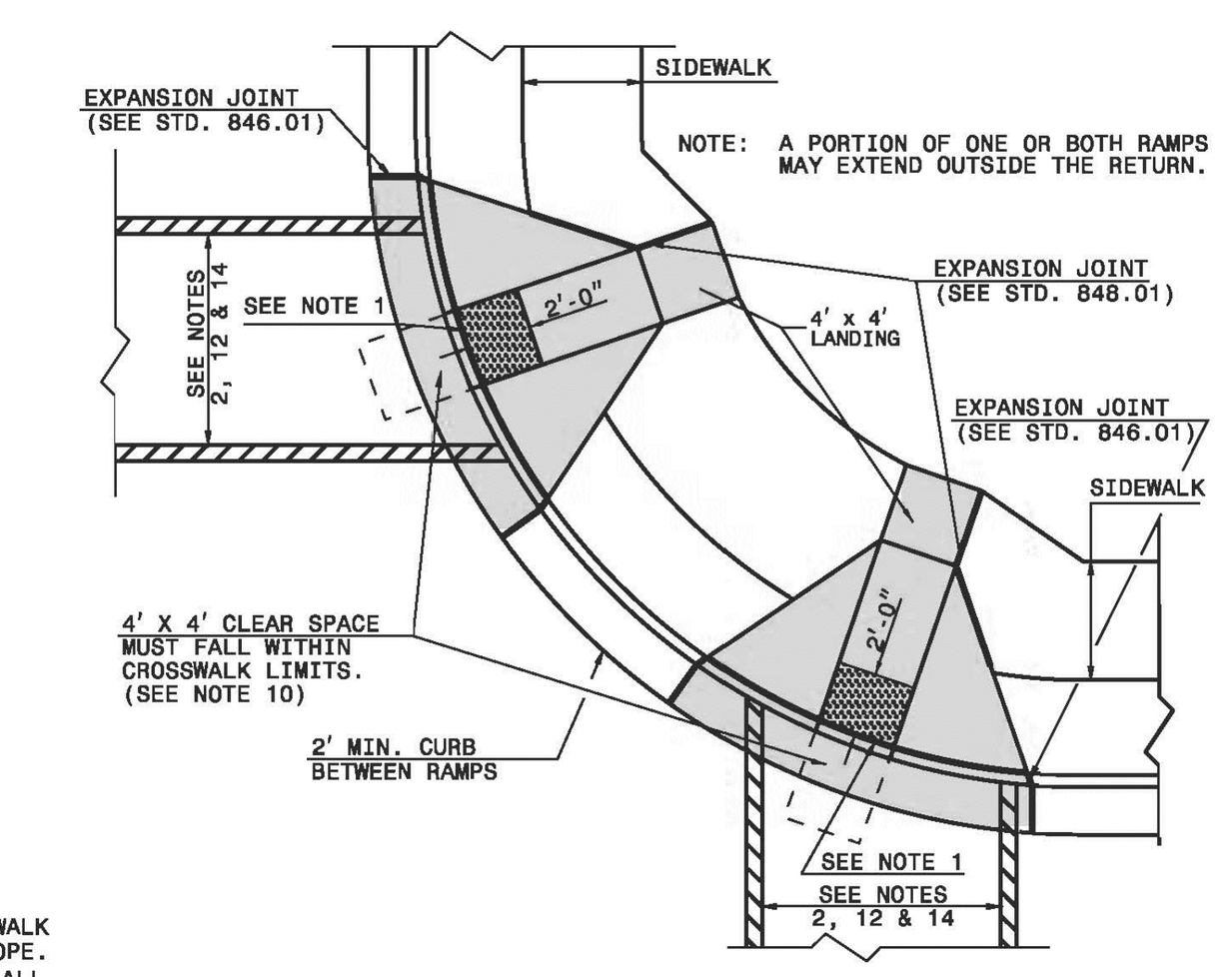

PLAN VIEW
DUAL RAMPS
ANY RADII
(4' MIN. FLOOR WIDTH)

SHEET 1 OF 3 848.05

STATE OF NORTH CAROLINA DEPT. OF TRANSPORTATION DIVISION OF HIGHWAYS RALEIGH, N.C. 1-12

ENGLISH STANDARD DRAWING FOR **CONCRETE ISLANDS**

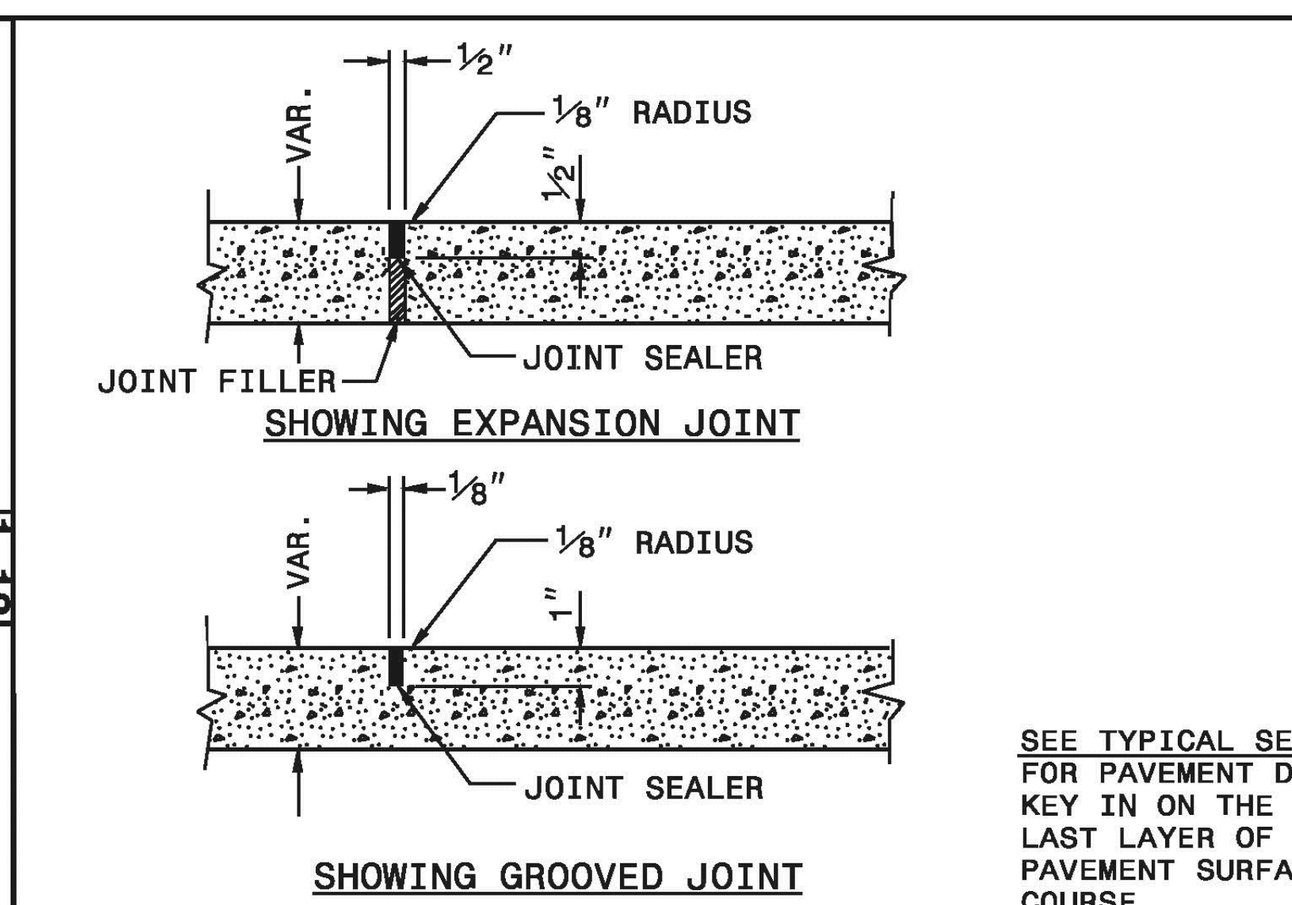

SHOWING EXPANSION JOINT

SHOWING GROOVED JOINT

PARTIAL LONGITUDINAL SECTIONS OF PAVED ISLANDS

NOTE:

WHEN MONOLITHIC CONCRETE ISLAND IS ON TOP OF SURFACE COURSE, DRIVE 40d SPIKES INTO SURFACE UNDER MONOLITHIC CONCRETE ISLAND. STAGGER SPIKES ON 2' CENTERS EACH WAY.

IN THE CONCRETE PAVEMENT (ISLAND) AND CONCRETE ISLAND (MONOLITHIC) PLACE ½" EXPANSION JOINTS AT 30' INTERVALS AND GROOVED JOINTS 1" DEEP AT 10' INTERVALS BETWEEN EXPANSION JOINTS.

LINE UP THE JOINTS IN THE CONCRETE PAVEMENT (ISLAND) WITH THE JOINTS IN THE CURB OR CURB AND GUTTER. FILL AND SEAL THE TOP ½" OF THE EXPANSION JOINTS AND THE ENTIRE DEPTH OF GROOVED JOINTS WITH JOINT SEALER.

FOR JOINTS IN THE CURB AND/OR CURB AND GUTTER, SEE STANDARD NO. 846.01

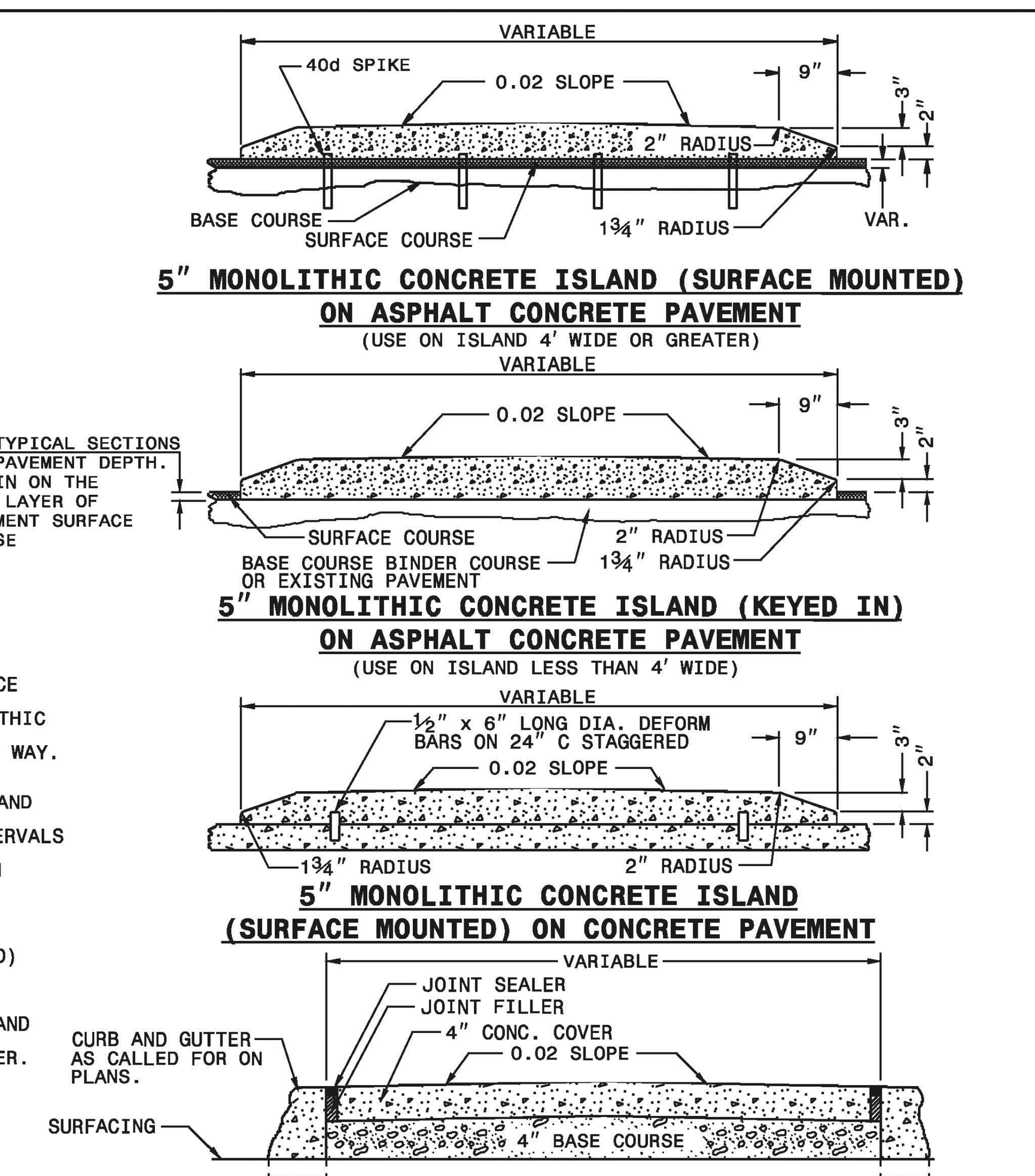

5" MONOLITHIC CONCRETE ISLAND (SURFACE MOUNTED) ON ASPHALT CONCRETE PAVEMENT
(USE ON ISLAND 4' WIDE OR GREATER)

5" MONOLITHIC CONCRETE ISLAND (KEYED IN) ON ASPHALT CONCRETE PAVEMENT
(USE ON ISLAND LESS THAN 4' WIDE)

5" MONOLITHIC CONCRETE ISLAND (SURFACE MOUNTED) ON CONCRETE PAVEMENT

PAVED CONCRETE ISLAND

SHEET 1 OF 1 852.01

STATE OF NORTH CAROLINA DEPT. OF TRANSPORTATION DIVISION OF HIGHWAYS RALEIGH, N.C. 1-12

ENGLISH STANDARD DRAWING FOR **CURB RAMP** PROPOSED CURB AND GUTTER

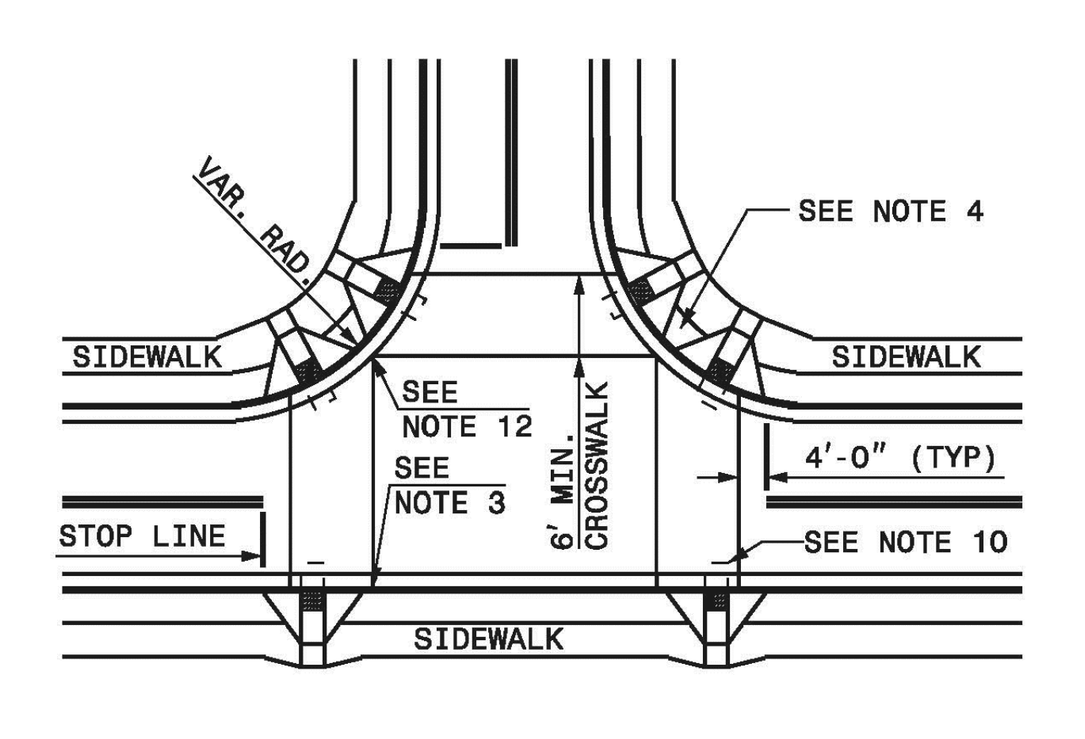

DETAIL SHOWING TYPICAL LOCATION OF CURB RAMPS, PEDESTRIAN CROSSWALKS AND STOP LINES FOR TEE INTERSECTIONS

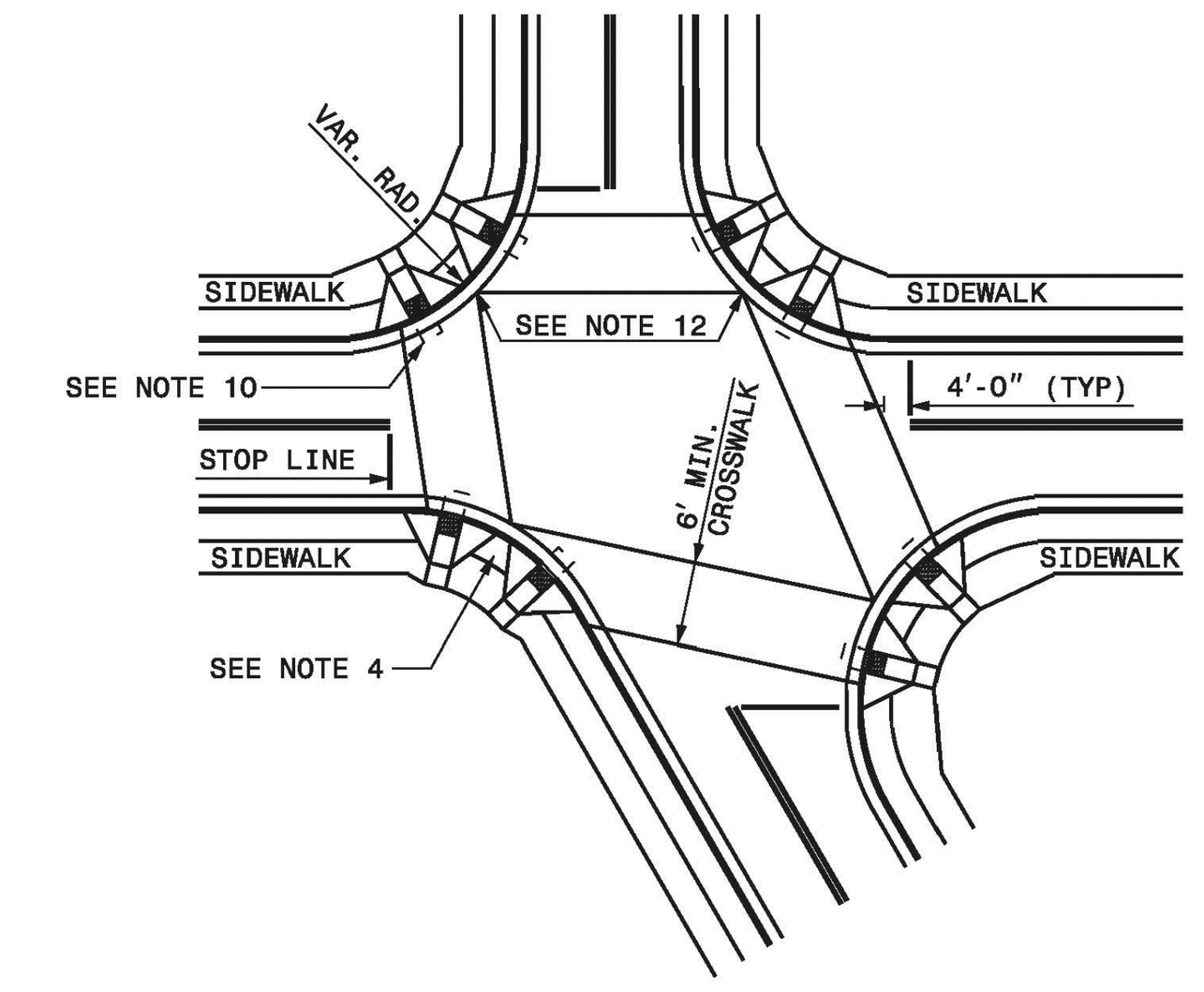

DETAIL SHOWING TYPICAL LOCATION OF CURB RAMPS, PEDESTRIAN CROSSWALKS AND STOP LINES

ROADWAY PLAN SYMBOL (CR) FOR PROPOSED CURB RAMP

PROPOSED CURB RAMP W/ LANDING
PROPOSED OR FUTURE SIDEWALK

ALLOWABLE LOCATIONS
DUAL RAMP RADII...........ANY

SHEET 2 OF 3 848.05

STATE OF NORTH CAROLINA DEPT. OF TRANSPORTATION DIVISION OF HIGHWAYS RALEIGH, N.C. 1-12

ENGLISH STANDARD DRAWING FOR **CURB RAMPS** NOTES

NOTES:
1. CONSTRUCT THE RAMP SURFACE TO BE STABLE, FIRM, AND SLIP RESISTANT. CONSTRUCT THE CURB RAMP TYPE AS SHOWN IN THE PAVEMENT MARKING PLANS OR AS DIRECTED BY THE ENGINEER.
2. LOCATE CURB RAMPS AND PLACE PEDESTRIAN CROSSWALK MARKINGS AS SHOWN IN THE PAVEMENT MARKING PLANS. WHEN FIELD ADJUSTMENTS REQUIRE MOVING CURB RAMPS OR MARKINGS AS SHOWN, CONTACT THE SIGNING AND DELINEATION UNIT OR LOCATE AS DIRECTED BY THE ENGINEER.
3. COORDINATE THE CURB RAMP AND THE PEDESTRIAN CROSSWALK MARKINGS SO A 4'x4' CLEAR SPACE AT THE BASE OF THE CURB RAMP WILL FALL WITHIN THE PEDESTRIAN CROSSWALK LINES.
4. SET BACK DISTANCE FROM INSIDE CROSSWALK MARKING TO NEAREST EDGE OF TRAVEL LANE IS 4' MINIMUM.
5. REFER TO THE PAVEMENT MARKING PLANS FOR STOP BAR LOCATIONS AT SIGNALIZED INTERSECTIONS. IF A PAVEMENT MARKING PLAN IS NOT PROVIDED, CONTACT THE SIGNAL DESIGN SECTION FOR THE STOP BAR LOCATIONS OR LOCATE AS DIRECTED BY THE ENGINEER.
6. TERMINATE PARKING A MINIMUM OF 20' BACK OF A PEDESTRIAN CROSSWALK.
7. CONSTRUCT CURB RAMPS A MINIMUM OF 4' WIDE.
8. CONSTRUCT THE RUNNING SLOPE OF THE RAMP 8.33% MAXIMUM.
9. ALLOWABLE CROSS SLOPE ON SIDEWALKS AND CURB RAMPS WILL BE 2% MAXIMUM.
10. CONSTRUCT THE SIDE FLARE SLOPE A MAXIMUM OF 10% MEASURED ALONG THE CURB LINE.
11. CONSTRUCT THE COUNTER SLOPE OF THE GUTTER OR STREET AT THE BASE OF THE CURB RAMP A MAXIMUM OF 5% AND MAINTAIN A SMOOTH TRANSITION.
12. CONSTRUCT LANDINGS FOR SIDEWALK A MINIMUM OF 4'x4' WITH A MAXIMUM SLOPE OF 2% IN ANY DIRECTION. CONSTRUCT LANDINGS FOR MEDIAN ISLANDS A MINIMUM OF 5'x5' WITH A MAXIMUM SLOPE OF 2% IN ANY DIRECTION.
13. TO USE A MEDIAN ISLAND AS A PEDESTRIAN REFUGE AREA, MEDIAN ISLANDS WILL BE A MINIMUM OF 6' WIDE. CONSTRUCT MEDIAN ISLANDS TO PROVIDE PASSAGE OVER OR THROUGHT THE ISLAND.
14. SMALL CHANNELIZATION ISLANDS THAT CAN NOT PROVIDE A 5'X5' LANDING AT THE TOP OF A RAMPS, WILL BE CUT THROUGH LEVEL WITH THE SURFACE STREET.
15. CURB RAMPS WITH RETURNED CURBS MAY BE USED ONLY WHERE PEDESTRIANS WOULD NOT NORMALLY WALK ACROSS THE RAMP. THE ADJACENT SURFACE IS PLANTING OR OTHER NON-WALKING SURFACE OR THE SIDE APPROACH IS SUBSTANTIALLY OBSTRUCTED.
16. PLACE A ½" EXPANSION JOINT WHERE THE CONCRETE CURB RAMP JOINS THE CURB AS SHOWN IN ROADWAY STANDARD DRAWING 848.01
17. PLACE ALL PEDESTRIAN PUSH BUTTON ACTUATORS AND CROSSING SIGNALS AS SHOWN IN THE PLANS OR AS SHOWN IN THE MUTCD.
18. CURB RAMPS THROUGH MEDIAN ISLANDS, SINGLE RAMPS AT DUAL CROSSWALKS OR LIMITED R/W SITUATIONS, WILL BE HANDLED BY SPECIAL DETAILS. CONTACT THE CONTRACT STANDARDS AND DEVELOPMENT UNIT FOR THE DETAILS OR FOR A SPECIAL DESIGN.

SHEET 3 OF 3 848.05

PRELIMINARY DESIGN - NOT RELEASED FOR CONSTRUCTION, RECORDATION, CONVEYANCES, OR SALES

WK DICKSON
community infrastructure consultants
1320 MAIN STREET
SUITE 400
COLUMBIA, SC 29201
(t)803-786-4261
(f)803-786-4263
WWW.WKDICKSON.COM

NORTH CAROLINA PROFESSIONAL SEAL 033121 ENGINEER BRIAN E. THOMAS 6/28/17

PROFESSIONAL SEAL

REVISION RECORD

NO.	DATE	DESCRIPTION	BY
1.	4/24/17	REVISED PER COMMENTS FROM NCDOT, TOWN OF WEDDINGTON, UCPW, & NCDEQ	JEB
2.	6/6/17	REVISED PER COMMENTS FROM NCDOT, TOWN OF WEDDINGTON, UCPW, & NCDEQ	TAK
3.	6/20/17	REVISED PER COMMENTS FROM TOWN OF WEDDINGTON	WGB
4.	6/28/17	REVISED PER COMMENTS FROM NCDOT	TAK

PROJECT NAME:
GRAHAM ALLEN SUBDIVISION
TOWN OF WEDDINGTON, SANDY RIDGE TOWNSHIP, UNION COUNTY, NC

DRAWING TITLE:
DETAILS - SHEET 1

PROJ. MGR.:	BET
DESIGN BY:	MDJ
DRAWN BY:	MDJ
PROJ. DATE:	OCT. 2016

DRAWING NUMBER:
9.0

WKD PROJ. NO.:
20160191.00.CL

FILE PATH:M:\Projects\Sunbelt Holding SE I\20160191\00CL - Graham Allen Subdivision Redesign CD's\CADD\DWG\Sheets\9.0-9.3 DETAILS.dwg, JBRISTOW, 6/29/2017 10:34:27 AM

WK DICKSON
community infrastructure consultants

COPYRIGHT ©, W.K. DICKSON & CO., INC. ALL RIGHTS RESERVED. REPRODUCTION OR USE OF THE CONTENTS OF THIS DOCUMENT, ADDITIONS OR DELETIONS TO THIS DOCUMENT, IN WHOLE OR IN PART, WITHOUT WRITTEN CONSENT OF W.K. DICKSON & CO., INC., IS PROHIBITED. ONLY COPIES FROM THE ORIGINAL OF THIS DOCUMENT, MARKED WITH AN ORIGINAL SIGNATURE AND SEAL SHALL BE CONSIDERED TO BE VALID, TRUE COPIES.

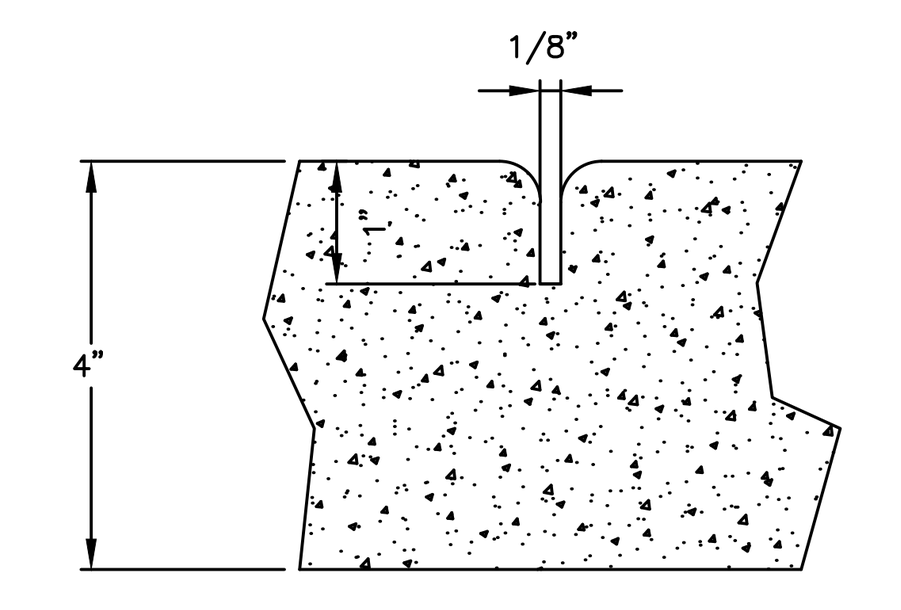

GROOVE JOINT IN SIDEWALK

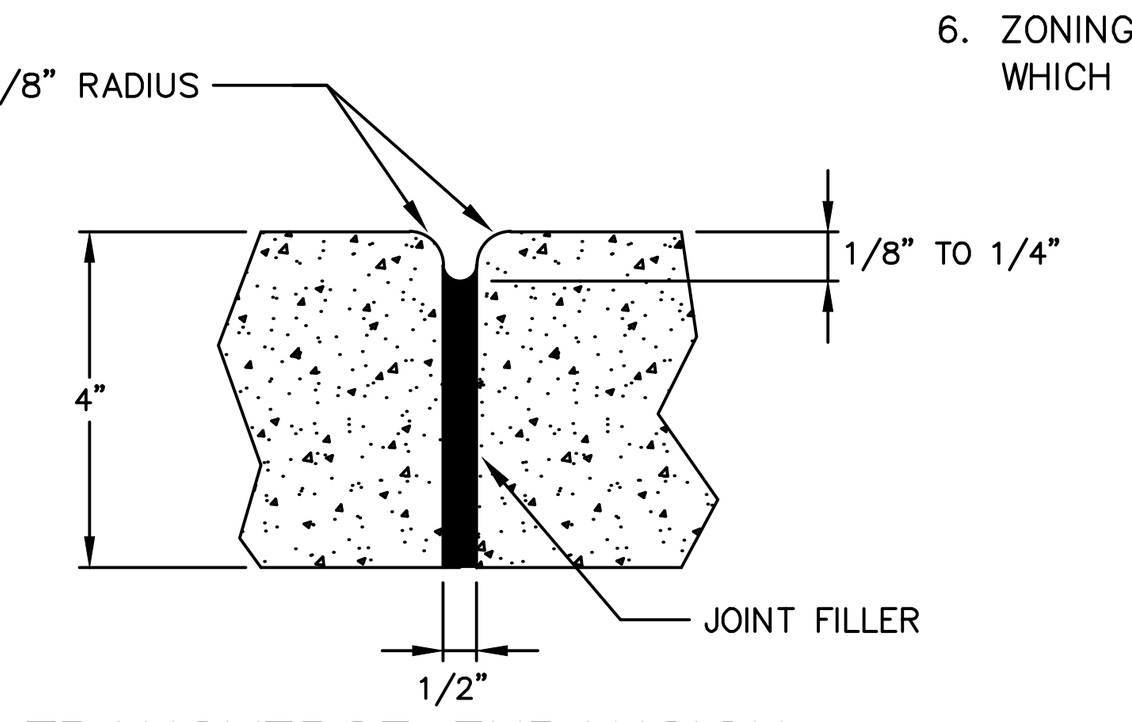

TRANSVERSE EXPANSION JOINT IN SIDEWALK

GENERAL NOTES:

1. A GROOVE JOINT 1" DEEP WITH 1/8" RADII SHALL BE REQUIRED IN THE CONCRETE SIDEWALK AT 5' INTERVALS. ONE 1/2" EXPANSION JOINT WILL BE REQUIRED AT 45' INTERVALS NOT TO EXCEED 50' AND MATCHING EXPANSION/CONSTRUCTION JOINT IN ADJACENT CURB. A SEALED 1/2" EXPANSION JOINT WILL BE REQUIRED WHERE THE SIDEWALK JOINS ANY RIGID STRUCTURE.
2. SIDEWALK AT DRIVEWAY ENTRANCES TO BE 6" THICK.
3. WIDTH OF SIDEWALK SHALL BE 5'.
4. SIDEWALK TO BE POURED TO END OF RADIUS AT INTERSECTING STREETS.
5. CONCRETE COMPRESSIVE STRENGTH SHALL BE 3600 PSI. IN 28 DAYS.
6. ZONING CONDITIONS MAY REQUIRE ADDITIONAL WIDTH SIDEWALKS WHICH SHALL SUPERSEDE THESE STANDARD DIMENSIONS SHOWN.

CONCRETE SIDEWALK N.T.S.

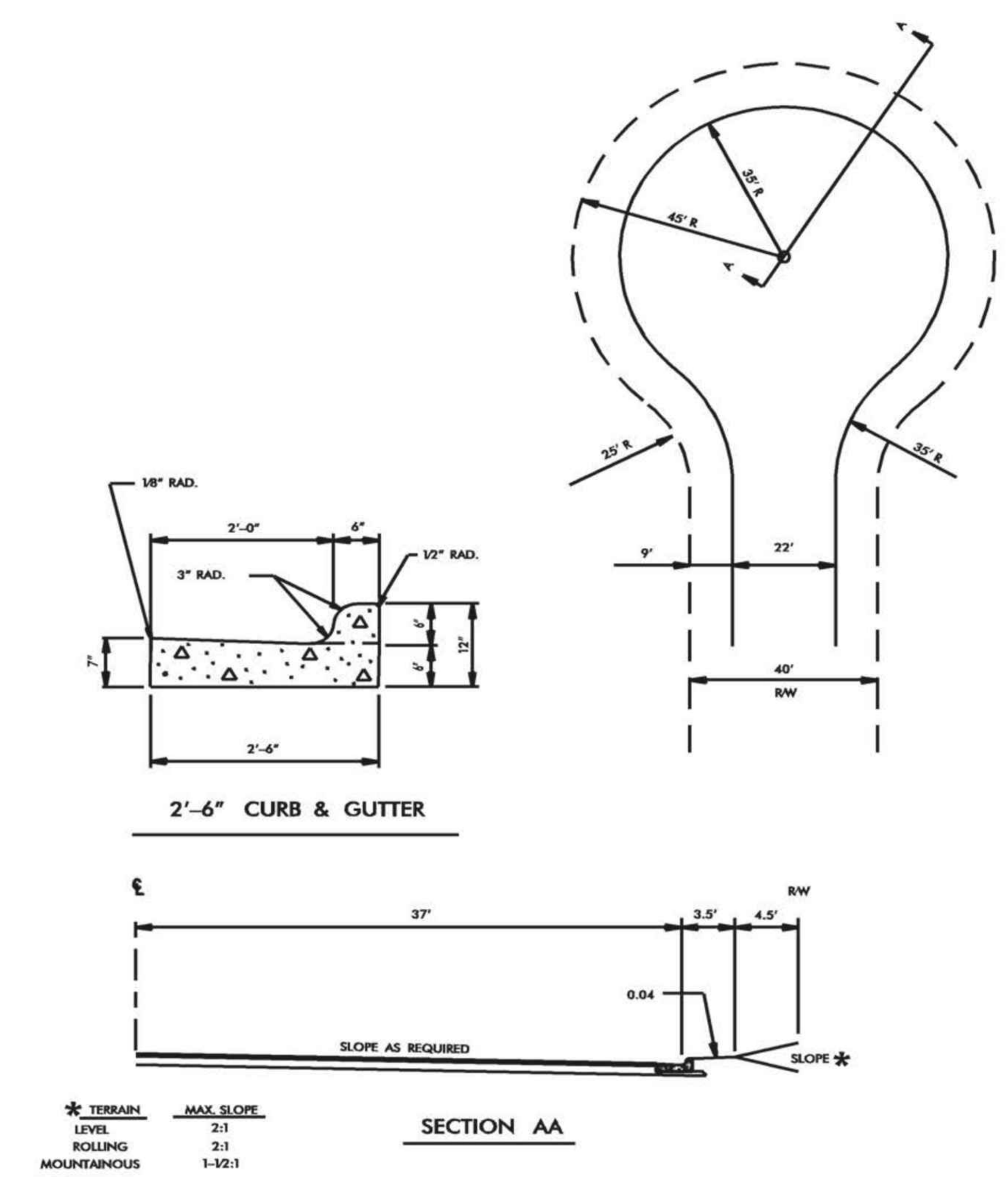

CUL-DE-SAC WITH CURB AND GUTTER N.T.S.

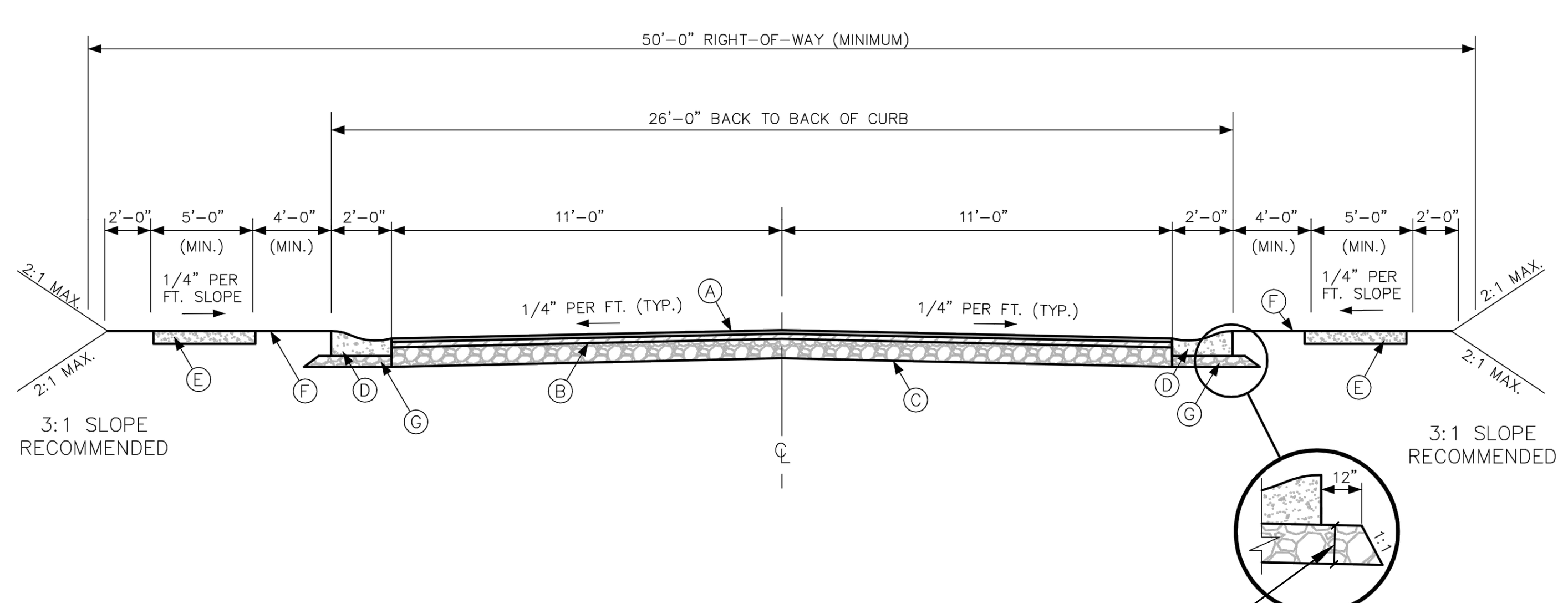

IMMEDIATELY UPON PROPERLY PREPARED STONE BASE

6" ABC OR 5" B25.0B OR C

NOTES:

1. SUBGRADE SHALL BE COMPACTED TO A DENSITY OF 100% IN ACCORDANCE WITH AASHTO-T99 AND NCDOT SPECIFICATIONS SECTION 500.
2. AGGREGATE BASE COURSE SHALL BE COMPACTED TO A DENSITY OF 100%.
3. ASPHALT COMPACTION SHALL BE IN ACCORDANCE WITH NCDOT SPECIFICATION SECTION 610.
4. IF REQUIRED BY THE TOWN, TESTS SHALL BE CONDUCTED BY AN INDEPENDENT TESTING FIRM AT THE DEVELOPERS EXPENSE.
5. FINAL LIFT OF PAVEMENT SHALL NOT BE PLACED UNTIL 80% OF HOME SITES ARE DEVELOPED. THE FINAL LIFT OF PAVEMENT SHALL NOT BE PLACED FOR STREETS THAT WILL BE USED TO ACCESS FUTURE PHASES UNTIL THOSE PHASES REACH 80% BUILD-OUT.

(A) 1 1/2" BITUMINOUS CONCRETE SURFACE COURSE, S9.5B
(B) 1 1/2" BITUMINOUS CONCRETE SURFACE COURSE, S9.5B
(C) 10" COMPACTED AGGREGATE BASE COURSE OR 5" BITUMINOUS CONCRETE BASE COURSE, B25.0C
(D) 2'-0" VALLEY GUTTER
(E) 4" CONCRETE SIDEWALK (OPTIONAL)
(F) 4'-0" PLANTING STRIP
(G) 6" MINIMUM COMPACTED AGGREGATE BASE COURSE

DATE: SEPTEMBER 2014	SCALE: NTS	TYPICAL SECTION RESIDENTIAL LOCAL STREET WITH CURB AND GUTTER	TOWN OF WEDDINGTON STANDARD DETAILS WEDDINGTON, N.C.	
REVISIONS			ROADWAY R	STD. NO. 102

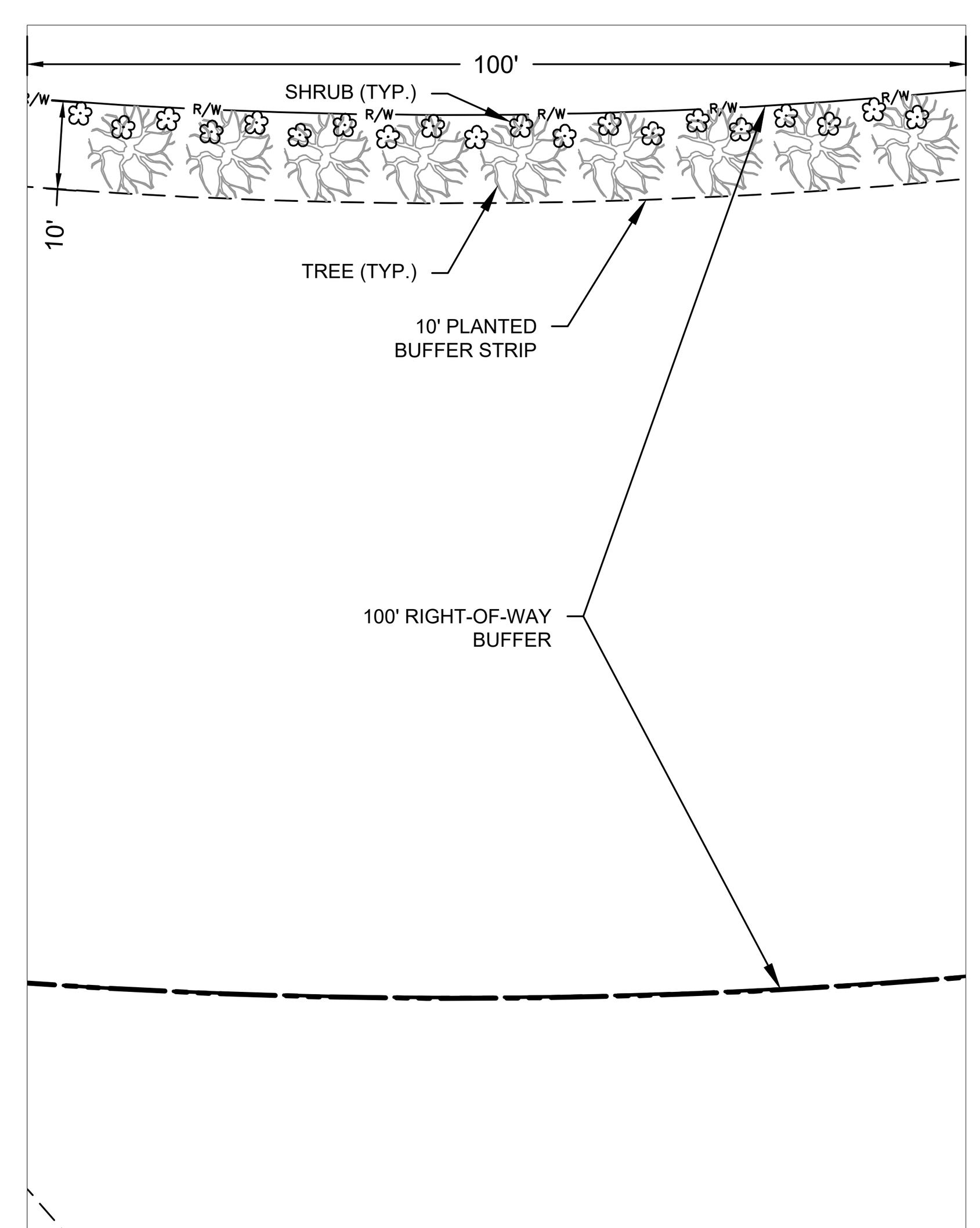

PLANTING BUFFER N.T.S.

10' PLANTED BUFFER STRIP PLANT SCHEDULE (PER 100 LINEAR FEET)

QTY.	BOTANICAL NAME	COMMON NAME	TREE OR SHRUB	MATURE HEIGHT	MIN. CALIPER	MIN. HEIGHT
3	ACER RUBRUM	RED MAPLE	TREE	25'-50'	2"	6'
3	JUNIPERUS VIGINIANA	EASTERN RED CEDAR	TREE	20'-65'	2"	6'
3	PINUS VIRGINIANA	VIRGINIA PINE	TREE	25'-50'	2"	6'
7	LAURUS NOBILIS	LAUREL	SHRUB	10'-15'		3'
7	CLEYERA JAPONICA	CLEYERA	SHRUB	10'-15'		3'
6	ABELIA GRANDIFLORA	GLOSSY ABELIA	SHRUB	3'-6'		2'

PLANTING NOTES:

1. CONTRACTOR SHALL PLANT 9 TREES AND 20 SHRUBS PER 100 LF OF BUFFER AND SHALL MEET THE REQUIREMENTS OF 46-76(d).
2. PLANTINGS SHALL BE PLACED OUTSIDE OF THE LINE OF SITE.
3. ALL TREES AND SHRUBS SHALL BE PLANTED PER THE TOWN OF WEDDINGTON ORDINANCE.
4. FORTY PERCENT OF THE REQUIRED TREES WITHIN THE BUFFER SHALL BE LARGE MATURE TREES;
5. ALL TREES SHALL HAVE A MINIMUM CALIPER OF TWO INCHES MEASURED SIX INCHES ABOVE GROUND AT THE TIME OF PLANTING;
6. SHRUBS SHALL BE EVERGREEN AND AT LEAST THREE FEET TALL WHEN PLANTED WITH THE AVERAGE HEIGHT OF SIX FEET IN THREE TO FOUR YEARS. HOWEVER, 25 PERCENT OF THE SHRUBS MAY VARY FROM THE ABOVE STANDARD. THE ALLOWED VARIATIONS ARE AS FOLLOWS:
   - 6.1. SHRUBS MAY BE DECIDUOUS;
   - 6.2. SHRUBS MAY BE TWO FEET TALL WHEN PLANTED, PROVIDED AN AVERAGE HEIGHT OF THREE TO FOUR FEET IS EXPECTED AS NORMAL GROWTH WITHIN FOUR YEARS;
   - 6.3. SHRUBS PLANTED ON A BERM MAY BE OF LESSER HEIGHT, PROVIDED THE COMBINED HEIGHT OF THE BERM AND PLANTINGS IS AT LEAST EIGHT FEET AFTER FOUR YEARS;
7. SHRUBS AND TREES SHALL BE ON THE APPROVED PLANT LIST IN APPENDIX 1 TO CHAPTER 58;
8. ALL SPECIFICATIONS FOR THE MEASUREMENT, QUALITY, AND INSTALLATION OF TREES AND SHRUBS SHALL BE IN ACCORDANCE WITH THE AMERICAN STANDARDS FOR NURSERY STOCK, PUBLISHED BY THE AMERICAN ASSOCIATION OF NURSERYMEN, AND FREE OF DISEASE; AND
9. TWENTY-FIVE PERCENT OF ALL TREES WILL BE EVERGREEN.

community infrastructure consultants

FILE PATH:M:\Projects\Sunbelt Holding SE I\20160191\00CL - Graham Allen Subdivision Redesign CD's\CADD\DWG\Sheets\9.0-9.3 DETAILS.dwg, JBRISTOW, 6/29/2017 10:34:39 AM

PRELIMINARY DESIGN - NOT RELEASED FOR CONSTRUCTION, RECORDATION, CONVEYANCES, OR SALES

WK DICKSON
community infrastructure consultants
1320 MAIN STREET
SUITE 400
COLUMBIA, SC 29201
(t)803-786-4261
(f)803-786-4263
WWW.WKDICKSON.COM

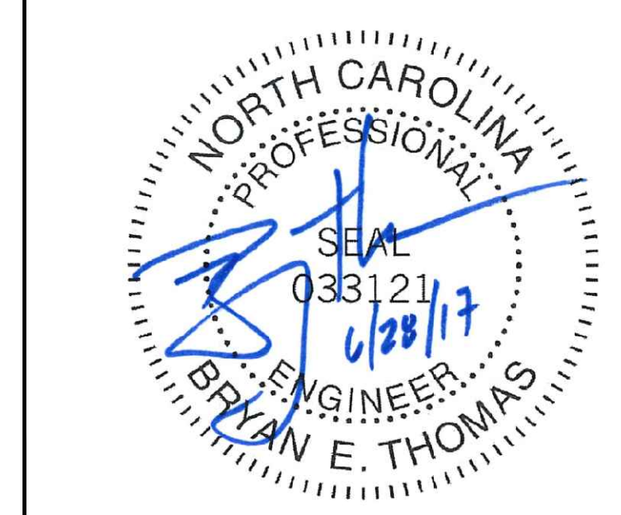

PROFESSIONAL SEAL

REVISION RECORD

NO.	DATE	DESCRIPTION	BY
1.	4/24/17	REVISED PER COMMENTS FROM NCDOT, TOWN OF WEDDINGTON, UCPW, & NCDEQ	JEB
2.	6/6/17	REVISED PER COMMENTS FROM NCDOT, TOWN OF WEDDINGTON, UCPW, & NCDEQ	TAK
3.	6/20/17	REVISED PER COMMENTS FROM TOWN OF WEDDINGTON	WGB
4.	6/28/17	REVISED PER COMMENTS FROM NCDOT	TAK

PROJECT NAME:
GRAHAM ALLEN SUBDIVISION
TOWN OF WEDDINGTON, SANDY RIDGE TOWNSHIP, UNION COUNTY, NC

DRAWING TITLE:
DETAILS - SHEET 2

PROJ. MGR.:	BET
DESIGN BY:	MDJ
DRAWN BY:	MDJ
PROJ. DATE:	OCT. 2016

DRAWING NUMBER:
9.1

WKD PROJ. NO.:
20160191.00.CL

COPYRIGHT © W.K. DICKSON & CO., INC. ALL RIGHTS RESERVED. REPRODUCTION OR USE OF THE CONTENTS OF THIS DOCUMENT, ADVISORY OR OTHERWISE, IN ANY MANNER WITHOUT THE EXPRESS WRITTEN PERMISSION OF W.K. DICKSON & CO., INC. IS PROHIBITED. ANY UNAUTHORIZED USE SHALL BE CONSIDERED TO BE VOID. TRUE COPIES FROM THE ORIGINAL OF THIS DOCUMENT MARKED WITH AN ORIGINAL SIGNATURE AND SEAL SHALL BE CONSIDERED TO BE VALID.

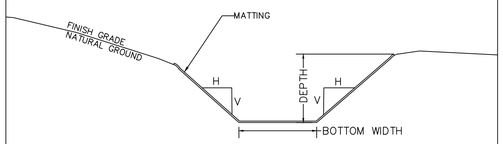

	DEPTH (FT)	BOTTOM WIDTH (FT)	SIDE SLOPE (H:V)	CHANNEL LINING TYPE
DD #1	2.00	1.00	2:1	SYNTHETIC MAT
DD #2	2.00	1.00	2:1	STRAW W/ NET
DD #3	2.00	1.00	2:1	STRAW W/ NET
DD #4	2.00	1.00	2:1	STRAW W/ NET
DD #5	2.00	1.00	2:1	SYNTHETIC MAT
DD #6	2.00	1.00	2:1	STRAW W/ NET
DD #7	2.00	1.00	2:1	SYNTHETIC MAT
DD #8	2.00	1.00	2:1	STRAW W/ NET
DD #9	2.00	1.00	2:1	STRAW W/ NET

MAINTENANCE NOTE:

INSPECT PERMANENT DIVERSIONS AFTER EVERY RAINFALL DURING THE CONSTRUCTION OPERATION. IMMEDIATELY REMOVE ANY OBSTRUCTIONS FROM THE FLOW AREA, AND REPAIR THE DIVERSION RIDGE. CHECK OUTLETS, AND MAKE TIMELY REPAIRS AS NEEDED. MAINTAIN THE VEGETATION IN A VIGOROUS, HEALTHY CONDITION AT ALL TIMES.

PERMANENT DIVERSION DITCH N.T.S.

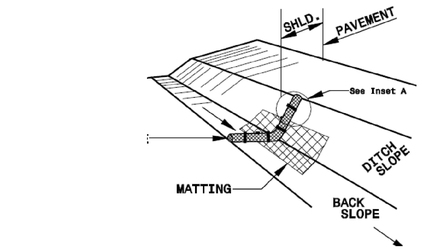



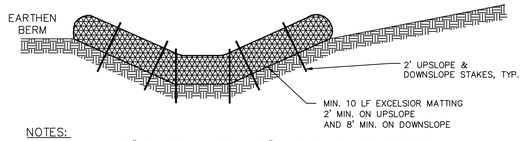

NOTES:
1. USE MINIMUM 12" DIA. STRAW WATTLE. 20" WATTLES ARE ALSO SPECIFIED
2. USE 2"x2" WOODEN STAKES 2-FT IN LENGTH ON THE UPSLOPE AND DOWNSLOPE AT AN ANGLE TO WEDGE THE WATTLE TO THE BOTTOM OF THE SWALE.
3. STAPLE ON BOTH SIDES OF THE WATTLE TO SECURE IT TO THE BOTTOM OF THE SWALE.

MAINTENANCE NOTES:
1. INSPECT WATTLES AT LEAST WEEKLY AND AFTER EACH SIGNIFICANT (1/2 INCH OR GREATER) RAINFALL EVENT. REPAIR ALL DAMAGE IMMEDIATELY.

STRAW WATTLES N.T.S.

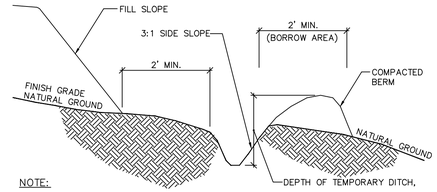

NOTE:
1. DITCH SHOULD HAVE MINIMUM LONGITUDINAL SLOPE OF 1.0%.
2. SILT FENCE MAY BE REQUIRED BEHIND BERM.
3. STABILIZE, SEED, MULCH, AND MATTED IMMEDIATELY AFTER CONSTRUCTION.

MAINTENANCE NOTE:

INSPECT TEMPORARY DIVERSIONS ONCE A WEEK AND AFTER EVERY RAINFALL. IMMEDIATELY REMOVE SEDIMENT FROM THE FLOW AREA AND REPAIR THE DIVERSION RIDGE. CAREFULLY CHECK OUTLETS AND MAKE TIMELY REPAIRS AS NEEDED. WHEN THE AREA PROTECTED IS PERMANENTLY STABILIZED, REMOVE THE RIDGE AND THE CHANNEL TO BLEND WITH THE NATURAL GROUND LEVEL AND APPROPRIATELY STABILIZE IT.

	DEPTH (FT)	BOTTOM WIDTH (FT)	TOP WIDTH (FT)	SIDE SLOPE (H:V)	CHANNEL LINING TYPE	CHECK DAM SPACING (FT)
TDD #1	2.00	4.00	9.00	2:1	STRAW W/ NET	182
TDD #2	2.00	1.00	9.00	2:1	SYNTHETIC MAT	69
TDD #3	2.00	1.00	9.00	2:1	STRAW W/ NET	77
TDD #4	2.00	1.00	9.00	2:1	SYNTHETIC MAT	69

TEMPORARY DIVERSION DITCH N.T.S.

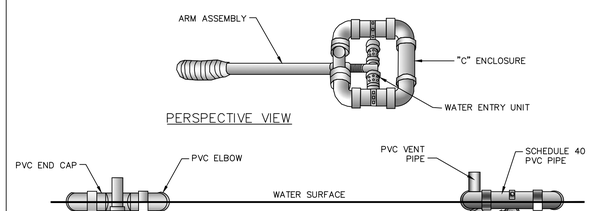

SCHEMATIC OF SKIMMER TAKEN FROM PENNSYLVANIA EROSION AND SEDIMENT POLLUTION CONTROL MANUAL, MARCH 2000.

SKIMMER N.T.S.

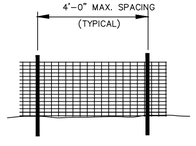

MAINTENANCE NOTE:
INSPECT BAFFLES AT LEAST ONCE A WEEK AND AFTER EACH RAINFALL. MAKE ANY REQUIRED REPAIRS IMMEDIATELY.

BE SURE TO MAINTAIN ACCESS TO THE BAFFLES. SHOULD THE FABRIC OF A BAFFLE COLLAPSE, TEAR, DECOMPOSE, OR BECOME INEFFECTIVE, REPLACE IT PROMPTLY.

REMOVE SEDIMENT DEPOSITS WHEN IT REACHES HALF FULL TO PROVIDE ADEQUATE STORAGE VOLUME FOR THE NEXT RAIN AND TO REDUCE PRESSURE ON THE BAFFLES. TAKE CARE TO AVOID DAMAGING THE BAFFLES DURING CLEANOUT. SEDIMENT DEPTH SHOULD NEVER EXCEED HALF THE DESIGNED STORAGE DEPTH.

AFTER THE CONTRIBUTING DRAINAGE AREA HAS BEEN PROPERLY STABILIZED, REMOVE ALL BAFFLE MATERIALS AND UNSTABLE SEDIMENT DEPOSITS, BRING THE AREA TO GRADE, AND STABILIZE IT.

GENERAL NOTES:
1. DRIVE 5' STEEL POST AT LEAST 24" INTO SOLID GROUND.
2. USE STAPLES 1' APART HORIZONTALLY AND VERTICALLY TO ATTACH THE FILTER FABRIC TO THE WIRE FENCE.
3. MINIMUM BAFFLE SPACING IS 10'.
4. THE FLOOR OF THE BASIN IN THE OUTLET ZONE AND BERMS SHOULD BE SEEDED IMMEDIATELY AFTER THE BASIN IS CONSTRUCTED.
5. REFER TO NCESCPDM SECTION #6.65 FOR ADDITIONAL SPECIFICATIONS.
6. BAFFLES TO BE CONSTRUCTED WITH COIR FABRIC OR OTHER APPROVED POROUS FABRIC.

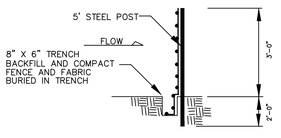

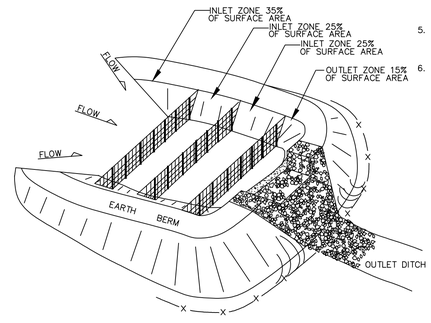

BAFFLE INSTALLATION N.T.S.

SKIMMER SEDIMENT BASIN DESIGN CRITERIA	
DRAINAGE AREA (ACRES)	< 10 AC.
MIN. LENGTH TO WIDTH RATIO	2:1
MAX. LENGTH TO WIDTH RATIO	6:1
MIN. VOLUME REQUIRED	1800 (CU. FT. PER AC. DISTURBED)
SURFACE AREA REQUIRED	325 (SQ. FT. PER CFS Q10)

PLAN VIEW

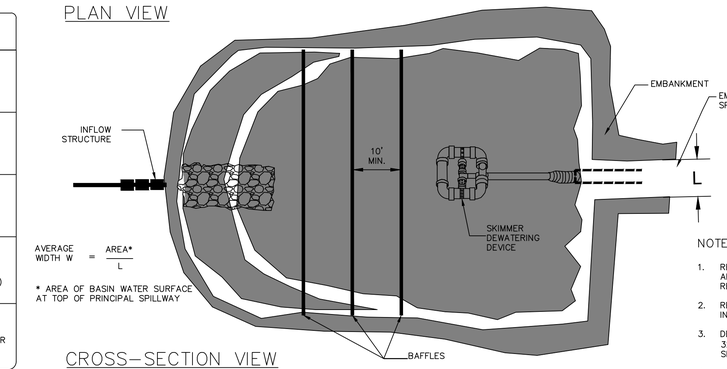

AVERAGE WIDTH W = AREA* / L

* AREA OF BASIN WATER SURFACE AT TOP OF PRINCIPAL SPILLWAY

NOTES:
1. REFER TO NCESCPDM SECTION #6.64 FOR ADDITIONAL DESIGN SPECIFICATIONS REGARDING SKIMMER SEDIMENT BASINS.
2. REFER TO BAFFLE DETAIL FOR SPACING AND INSTALLATION OF BAFFLES.
3. DEWATERING PIPE BASIN #2. 32 LF 8" DIP UPSTREAM INVERT: 697.00 SLOPE: 2.0%
4. ALL SKIMMER BASIN DEWATERING TIMES ARE 3 DAYS.
5. STABILIZE, SEED, AND MULCH BASIN SLOPES IMMEDIATELY AFTER CONSTRUCTION

CROSS-SECTION VIEW

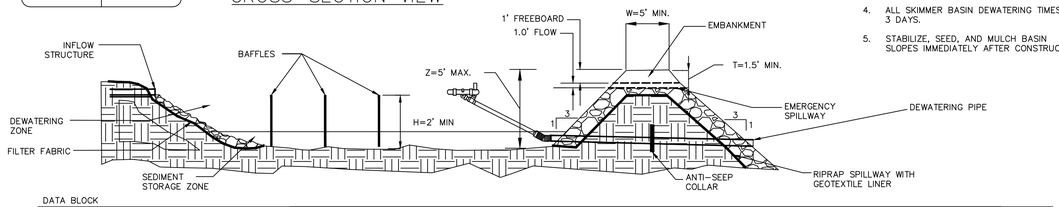

DATA BLOCK

BASIN	DRAINAGE AREA (ACRES)	DENUDED AREA (ACRES)	Q_{10}	BASIN VOLUME REQUIRED (CUBIC FT.)	BASIN VOLUME PROVIDED (CUBIC FT.)	BASIN SURFACE AREA REQUIRED (SQ FT.)	BASIN SURFACE AREA PROVIDED (SQ FT.)	CLEANOUT DEPTH (FT.) H/2	H (FEET)	Z (FEET)	L (FEET)	T (FEET)	W (FEET)	SKIMMER PIPE DIAMETER	SKIMMER ORIFICE DIAMETER	SKIMMER INVERT
#2	4.99	4.99	22	8,982	17,647	7,150	9,508	1.5	3	5	10	1.5	10	4 (IN)	1.5 (IN)	697

SKIMMER SEDIMENT BASIN N.T.S.

WK DICKSON
community infrastructure consultants
1320 MAIN STREET
SUITE 400
COLUMBIA, SC 29201
(t)803-786-4261
(f)803-786-4263
WWW.WKDICKSON.COM

NORTH CAROLINA PROFESSIONAL ENGINEER SEAL 033121 4/28/17 BRIAN E. THOMAS
PROFESSIONAL SEAL

REVISION RECORD

NO.	DATE	DESCRIPTION	BY
1.	4/24/17	REVISED PER COMMENTS FROM NCDOT, TOWN OF WEDDINGTON, UCPW, & NCDEQ	JEB
2.	6/6/17	REVISED PER COMMENTS FROM NCDOT, TOWN OF WEDDINGTON, UCPW, & NCDEQ	TAK
3.	6/20/17	REVISED PER COMMENTS FROM TOWN OF WEDDINGTON	WGB
4.	6/28/17	REVISED PER COMMENTS FROM NCDOT	TAK

PRELIMINARY DESIGN - NOT RELEASED FOR CONSTRUCTION, RECORDATION, CONVEYANCES, OR SALES

PROJECT NAME:
GRAHAM ALLEN SUBDIVISION
TOWN OF WEDDINGTON, SANDY RIDGE TOWNSHIP, UNION COUNTY, NC

DRAWING TITLE:
DETAILS - SHEET 3

PROJ. MGR.:	BET
DESIGN BY:	MDJ
DRAWN BY:	MDJ
PROJ. DATE:	OCT. 2016

DRAWING NUMBER:
9.2

WKD PROJ. NO.:
20160191.00.CL

FILEPATH P:\Projects\Active\Working SE (20160191)\00 - Graham Allen Subdivision Redesign CDs\CAD\DWG\Sheets\9.2-DETAILS.dwg, JBRITTON, 6/30/2017 7:23:42 AM

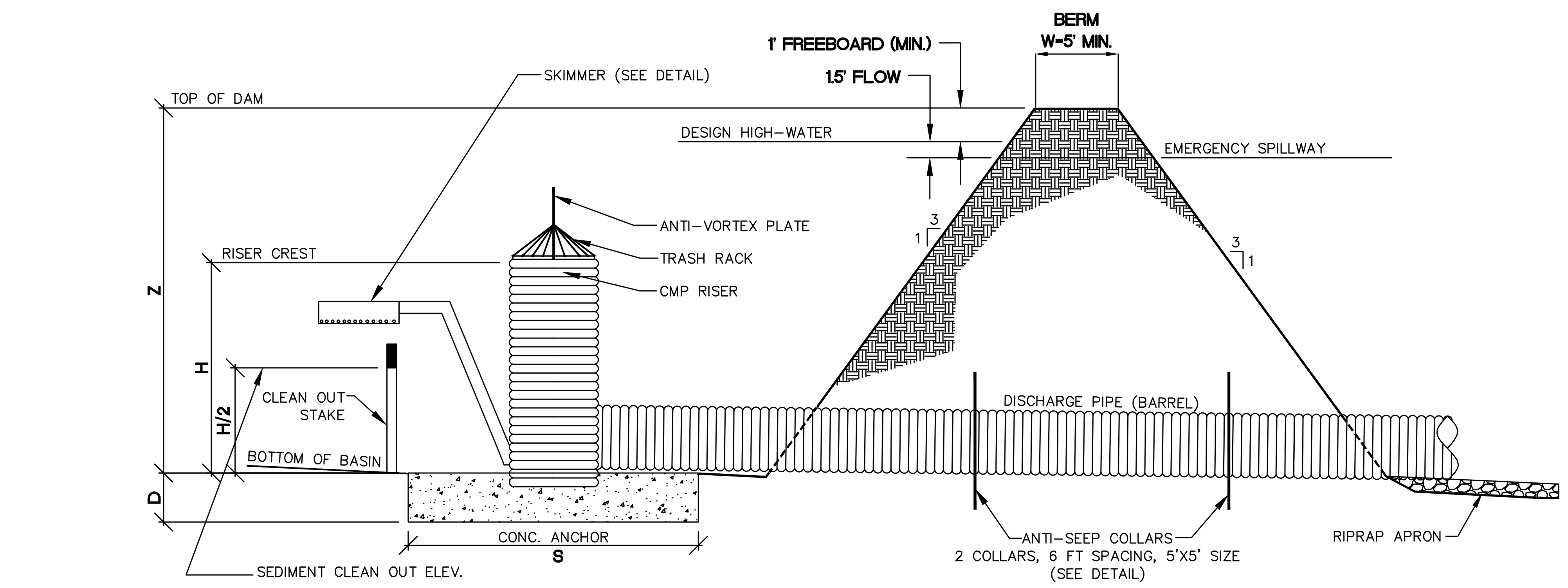

DATA BLOCK

BASIN	BOTTOM ELEVATION (FEET)	CLEANOUT DEPTH H/2 (FEET)	Z (FEET)	W (FEET)	S (FEET)	D (FEET)	SKIMMER PIPE DIAMETER (IN)	SKIMMER ORIFICE DIAMETER (IN)	RISER DIA. (FEET)	BARREL DIAM. (FEET)	BARREL LENGTH (FEET)	BARREL SLOPE (FT/FT)	UPSTREAM INVERT	DOWNSTREAM INVERT	H (FEET)
BASIN #1	709.5	2	7	10	6	2	4	3	4	2.5	36	0.01	709.5	708.14	4

	SEDIMENT STORAGE REQUIRED	SEDIMENT STORAGE PROVIDED	REQUIRED SURFACE AREA	PROVIDED SURFACE AREA	AVERAGE LENGTH (APPROX.)	AVERAGE WIDTH (APPROX.)
BASIN #1	29,394(CF)	40,910 (CF)	21,750 (SF)	22,942(SF)	130	80

NOTE:
REMOVABLE TRASH RACK IS OPTIONAL FOR EASE IN MAINTENANCE.

RISER TYPE SEDIMENT BASIN WITH SKIMMER

N.T.S.

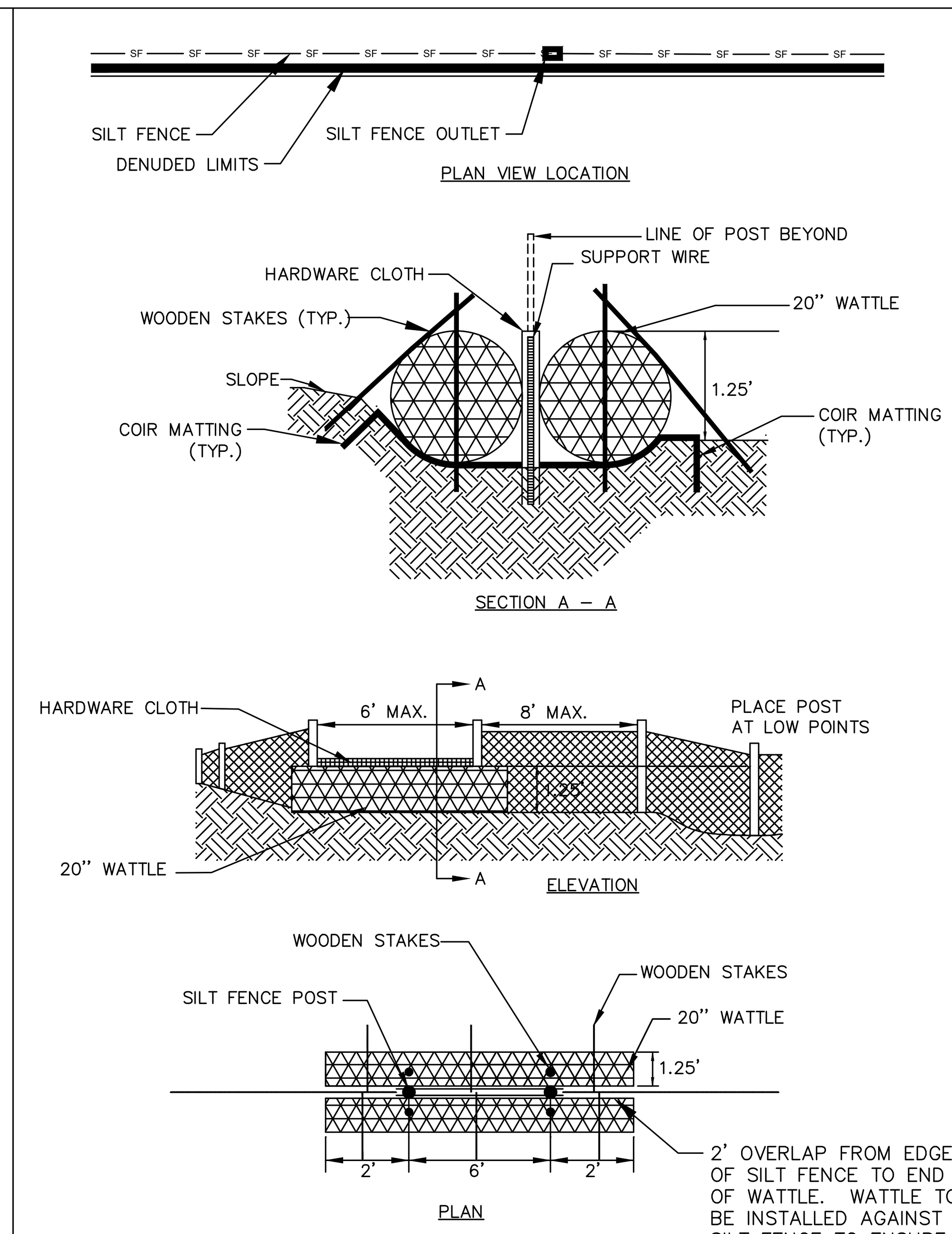

MAINTENANCE NOTES:
SEE SILT FENCE DETAIL FOR MAINTENANCE NOTES.

SILT FENCE OUTLET

N.T.S.

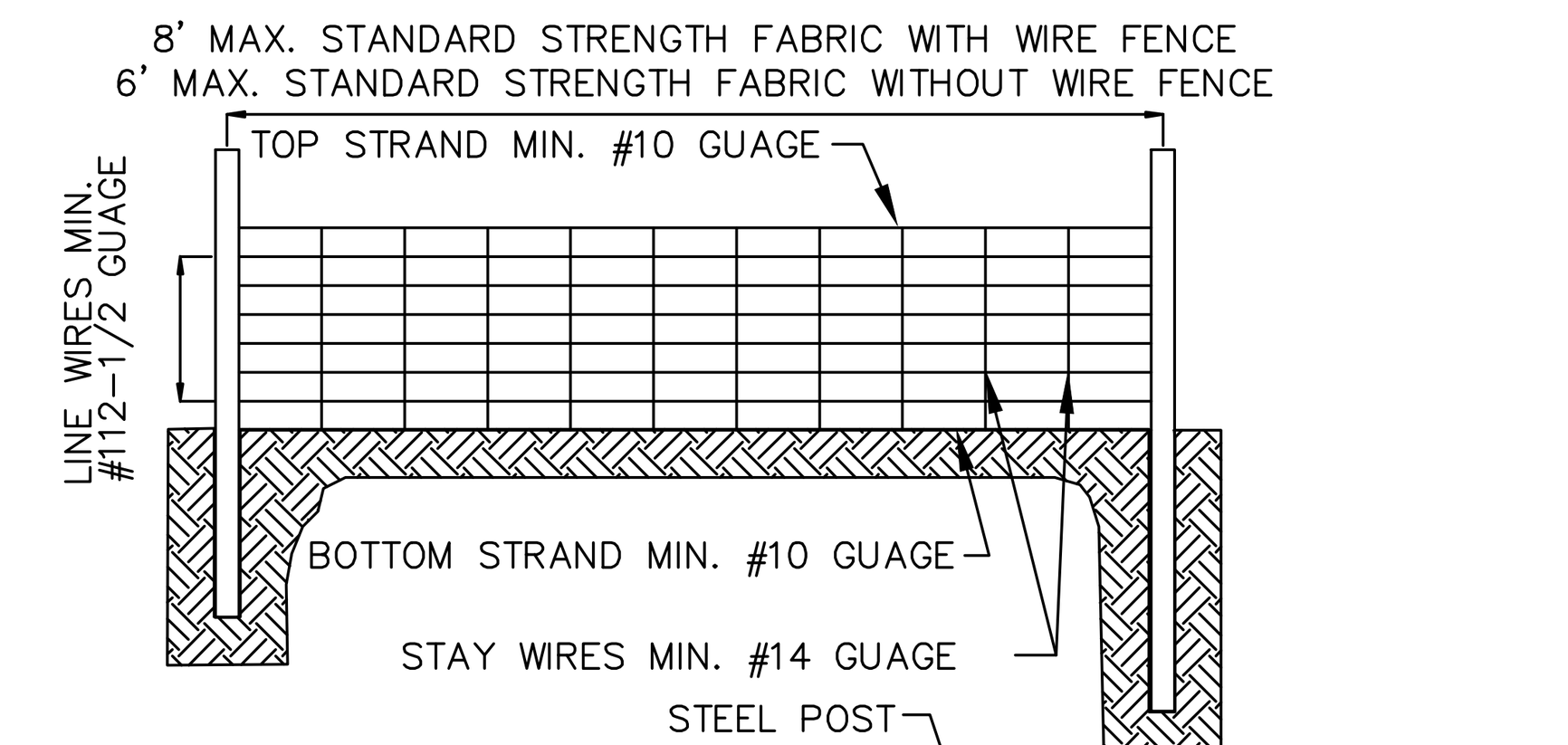

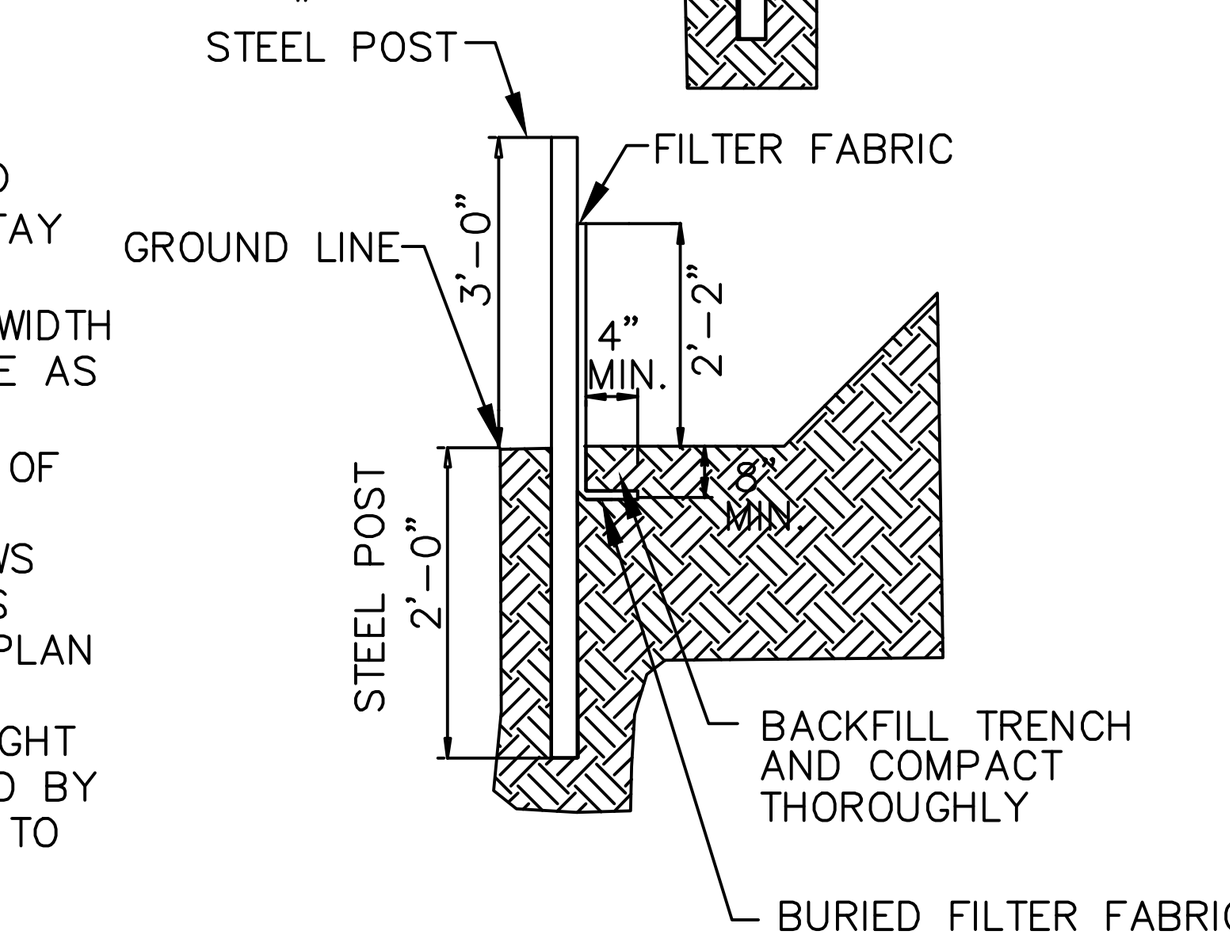

1. WIRE SHALL BE A MINIMUM OF 32" IN WIDTH AND SHALL HAVE A MINIMUM OF 6 LINE WIRES W/12" STAY SPACING.
2. FILTER FABRIC SHALL BE A MINIMUM OF 36" IN WIDTH AND SHALL BE FASTENED ADEQUATELY TO THE WIRE AS DIRECTED BY THE ENGINEER.
3. STEEL POST SHALL BE 5' 0" IN HEIGHT AND BE OF SELF FASTENER ANGLE STEEL TYPE.
4. SILT FENCE SHALL BE INSTALLED ON ROW OR TWS ALONG DOWNHILL SIDE OF EASEMENT. SILT FENCE IS OFFSET FROM ROW OR TWS ON EROSION CONTROL PLAN SHEETS FOR DISPLAY PURPOSES ONLY.
5. SYNTHETIC FILTER FABRIC OF AT LEAST 95% WEIGHT OF POLYOLEFINS OR POLYESTER, WHICH IS CERTIFIED BY THE MANUFACTURER OR SUPPLIER AS CONFORMING TO THE REQUIREMENTS IN ASTM D 6461.

MAINTENANCE NOTES:

INSPECT SEDIMENT FENCES AT LEAST ONCE A WEEK AND AFTER EACH RAINFALL. MAKE ANY REQUIRED REPAIRS IMMEDIATELY.

SHOULD THE FABRIC OF A SEDIMENT FENCE COLLAPSE, TEAR, DECOMPOSE OR BECOME INEFFECTIVE, REPLACE IT PROMPTLY.

REMOVE SEDIMENT DEPOSITS AS NECESSARY TO PROVIDE ADEQUATE STORAGE VOLUME FOR THE NEXT RAIN AND TO REDUCE PRESSURE ON THE FENCE. TAKE CARE TO AVOID UNDERMINING THE FENCE DURING CLEANOUT.

REMOVE ALL FENCING MATERIALS AND UNSTABLE SEDIMENT DEPOSITS AND BRING THE AREA TO GRADE AND STABILIZE IT AFTER THE CONTRIBUTING DRAINAGE AREA HAS BEEN PROPERLY STABILIZED.

GUIDELINES FOR TEMPORARY SILT FENCE DETAIL

N.T.S.

FES/HW #	D_o (Pipe ø) (ft)	T_w (ft)	T_w<0.5ø	Q (cfs)	V (ft/s)	d_{50} (ft)	L_a (ft)	Apron width at pipe (ft)	Apron width at outlet (ft)	Max Stone ø (ft)	Apron Thickness(ft)
HW-1	2.5	0	OKAY	1.52	0.31	0.5	16	7.5	19	0.75	1.13
HW-2	2	0	OKAY	2.85	0.91	0.5	16	6	18	0.75	1.13
HW-A1	2.5	0	OKAY	10.64	4.93	0.5	19	7.5	22	0.75	1.13
HW-D1	2.5	0	OKAY	13.93	5.36	0.5	19	7.5	22	0.75	1.13
HW-H1	2	0	OKAY	4.11	3.44	0.5	16	6	18	0.75	1.13
HW-I1	2.5	0	OKAY	12.79	5.54	0.5	20	7.5	23	0.75	1.13
FE-J1	1.5	0	OKAY	2.32	3.96	0.5	10	4.5	12	0.75	1.13
FE-K1	1.25	0	OKAY	5.90	3.48	0.5	10	3.75	11	0.75	1.13

*ALL RIPRAP TO BE CLASS 1
**d50 (see fig 8.06 a&b "NC SEDIMENT AND EROSION CONTROL MANUAL"
dmax = 1.5 x d50
T = 1.5 X dmax.

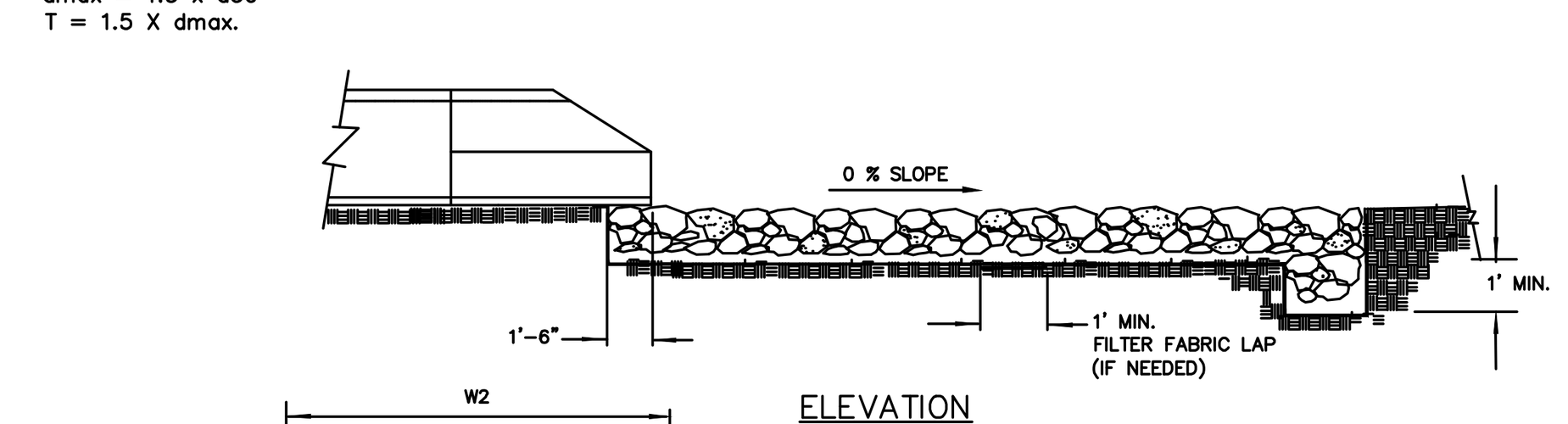

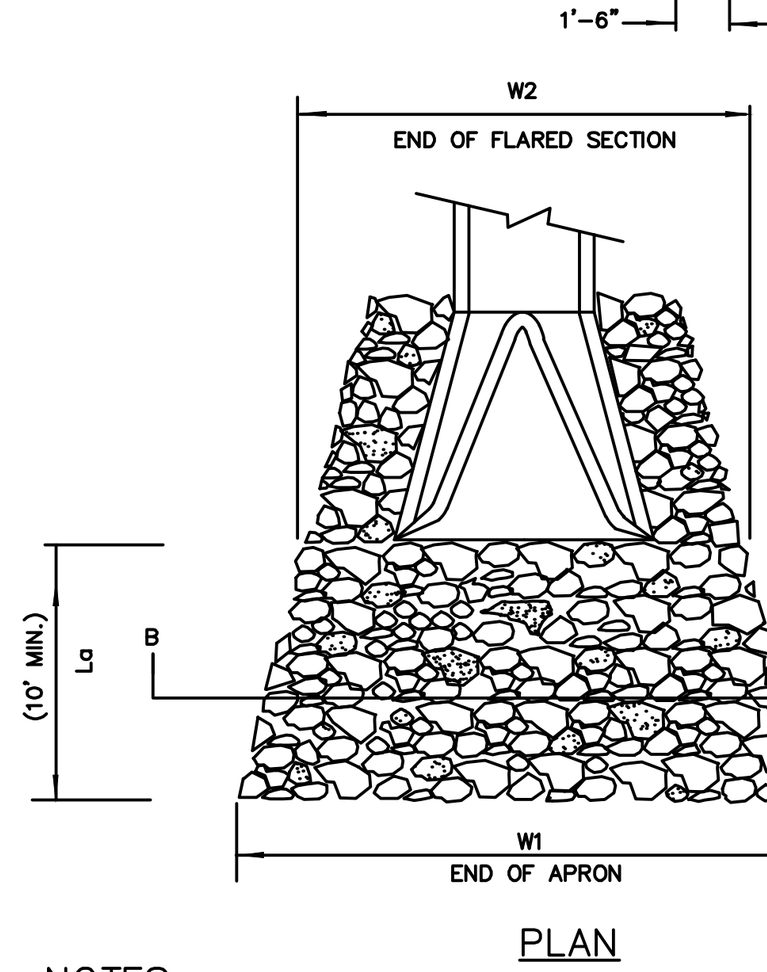

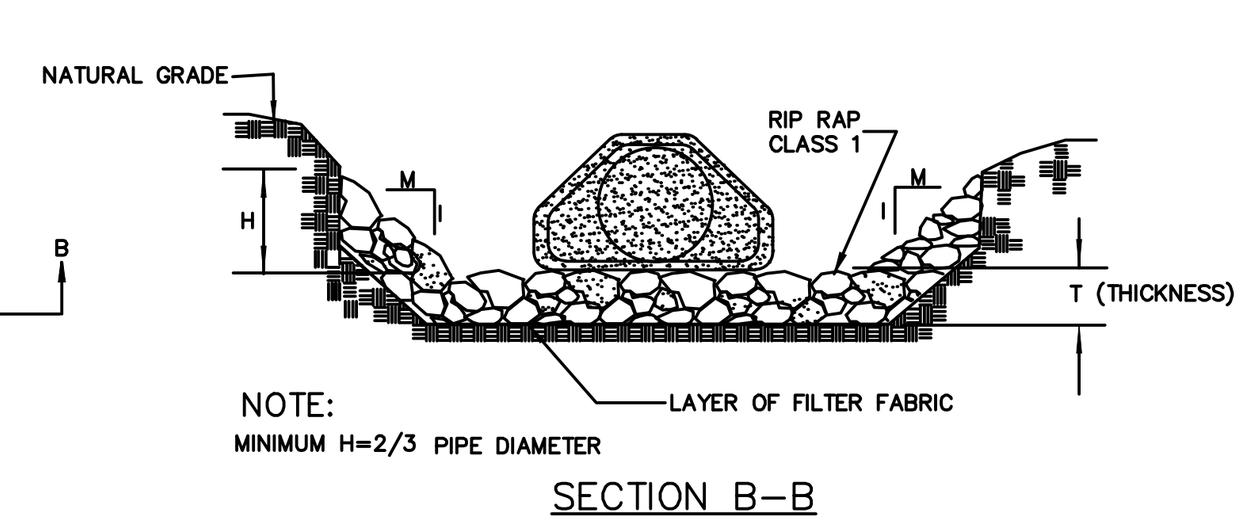

NOTES:

1. CLASS OR MEDIAN SIZE OF RIPRAP AND LENGTH, WIDTH AND DEPTH OF APRON TO BE DESIGNED BY THE ENGINEER.
2. REFER TO THE CHARLOTTE MECKLENBURG STORM WATER DESIGN MANUAL FOR RIPRAP APRON DESIGN STANDARDS.
3. RIPRAP SHOULD EXTEND UP BOTH SIDES OF THE APRON AND AROUND THE END OF THE PIPE OR CULVERT AT THE DISCHARGE OUTLET AT A MAXIMUM SLOPE OF 2:1 AND A HEIGHT NOT LESS THAN TWO THIRDS THE PIPE DIAMETER OR CULVERT HEIGHT.
4. THERE SHALL BE NO OVERFLOW FROM THE END OF THE APRON TO THE SURFACE OF THE RECEIVING CHANNEL. THE AREA TO BE PAVED OR RIPRAPPED SHALL BE UNDERCUT SO THAT THE INVERT OF THE APRON SHALL BE AT THE SAME GRADE (FLUSH) WITH THE SURFACE OF THE RECEIVING CHANNEL. THE APRON SHALL HAVE A CUTOFF OR TOE WALL AT THE DOWNSTREAM END.
5. THE WIDTH OF THE END OF THE APRON SHALL BE EQUAL TO THE BOTTOM WIDTH OF THE RECEIVING CHANNEL. MAXIMUM TAPER TO RECEIVING CHANNEL 5:1.
6. ALL SUBGRADE FOR STRUCTURE TO BE COMPACTED TO 95% OR GREATER.
7. THE PLACING OF FILL, EITHER LOOSE OR COMPACTED IN THE RECEIVING CHANNEL SHALL NOT BE ALLOWED.
8. NO BENDS OR CURVES IN THE HORIZONTAL ALIGNMENT OF THE APRON WILL BE PERMITTED.
9. FILTER FABRIC SHALL BE INSTALLED ON COMPACTED SUBGRADE PRIOR TO PLACEMENT OF RIP RAP.
10. ANY DISTURBED AREA FROM END OF APRON TO RECIEVING CHANNEL MUST BE STABILIZED.

USE USDA NOMOGRAPH FROM NC SEDIMENT AND EROSION CONTROL MANUAL OR CHARLOTTE MECKLENBURG STORM WATER DESIGN MANUAL FOR DESIGN DATA.

RIPRAP APRON

N.T.S.

GENERAL NOTES:

1. GRAVEL AND RIP RAP FILTER BERM BASIN SHOULD BE USED TO PROTECT PIPE INVERTS THAT DRAIN 10 ACRES OR LESS.
2. DIMENSIONS SHOWN ARE THE MINIMUM ACCEPTED UNLESS OTHERWISE NOTED.
3. IN LIEU OF RING FILTER, THE OUTLET PIPE MAY BE COVERED WITH HARDWARE CLOTH, RIP RAP AND WASHED STONE WHERE A SPILLWAY IS NOT REQUIRED.

MAINTENANCE NOTES:

INSPECT ROCK PIPE INLET PROTECTION AT LEAST WEEKLY AND AFTER EACH SIGNIFICANT (1/2 INCH OR GREATER) RAINFALL EVENT AND REPAIR IMMEDIATELY. REMOVE SEDIMENT AND RESTORE THE SEDIMENT STORAGE AREA TO ITS ORIGINAL DIMENSIONS WHEN THE SEDIMENT HAS ACCUMULATED TO ONE-HALF THE DESIGN DEPTH OF THE TRAP. PLACE THE SEDIMENT THAT IS REMOVED IN THE DESIGNATED DISPOSAL AREA AND REPLACE THE CONTAMINATED PART OF THE GRAVEL FACING.

CHECK THE STRUCTURE FOR DAMAGE. ANY RIPRAP DISPLACED FROM THE STONE HORSESHOE MUST BE REPLACED IMMEDIATELY.

AFTER ALL THE SEDIMENT PRODUCING AREAS HAVE BEEN PERMANENTLY STABILIZED, REMOVE THE STRUCTURE AND ALL THE UNSTABLE SEDIMENT. SMOOTH THE AREA TO BLEND WITH THE ADJOINING AREAS AND PROVIDE PERMANENT GROUND COVER.

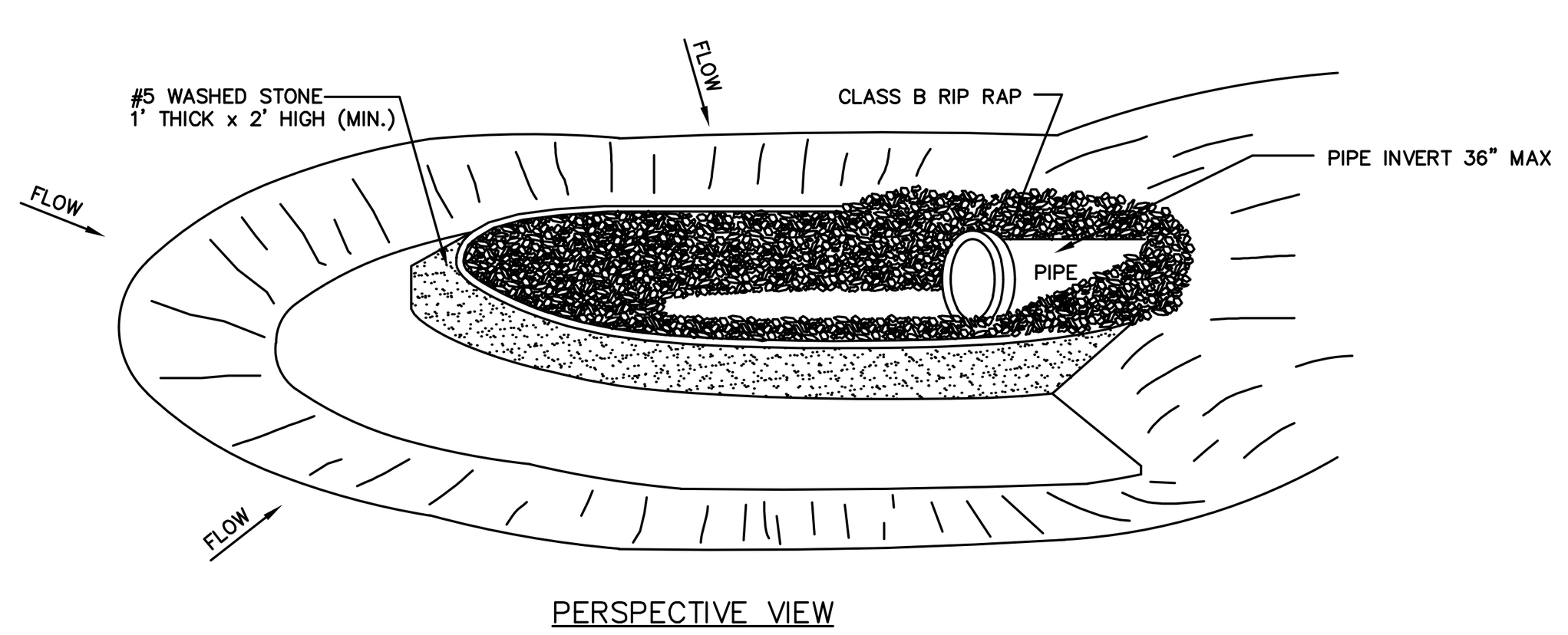

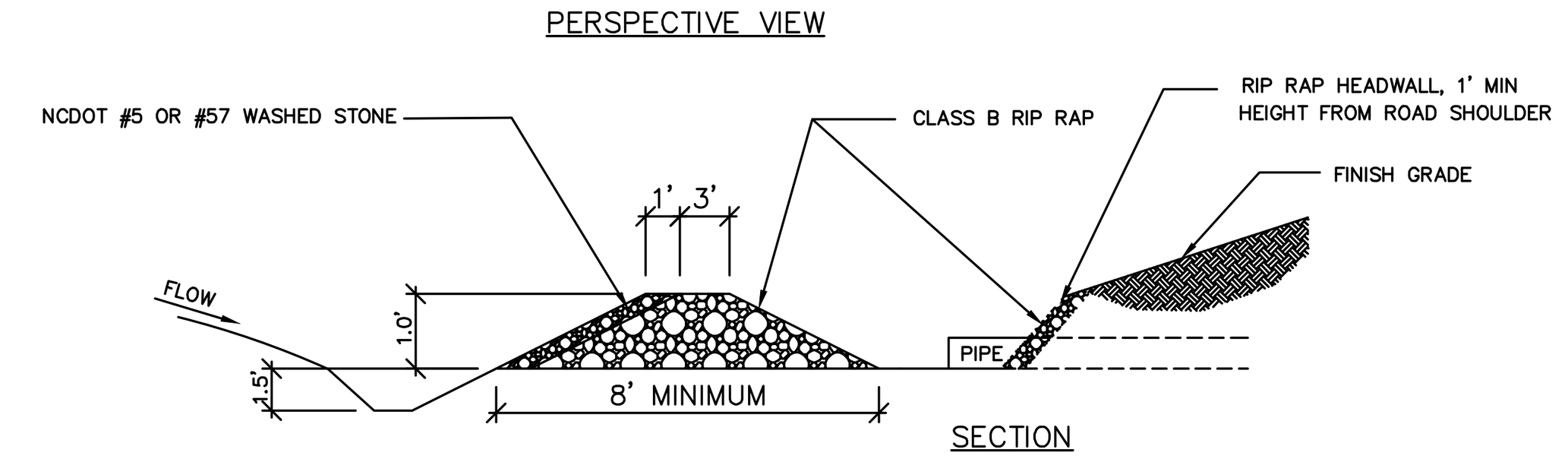

ROCK PIPE INLET PROTECTION

N.T.S.

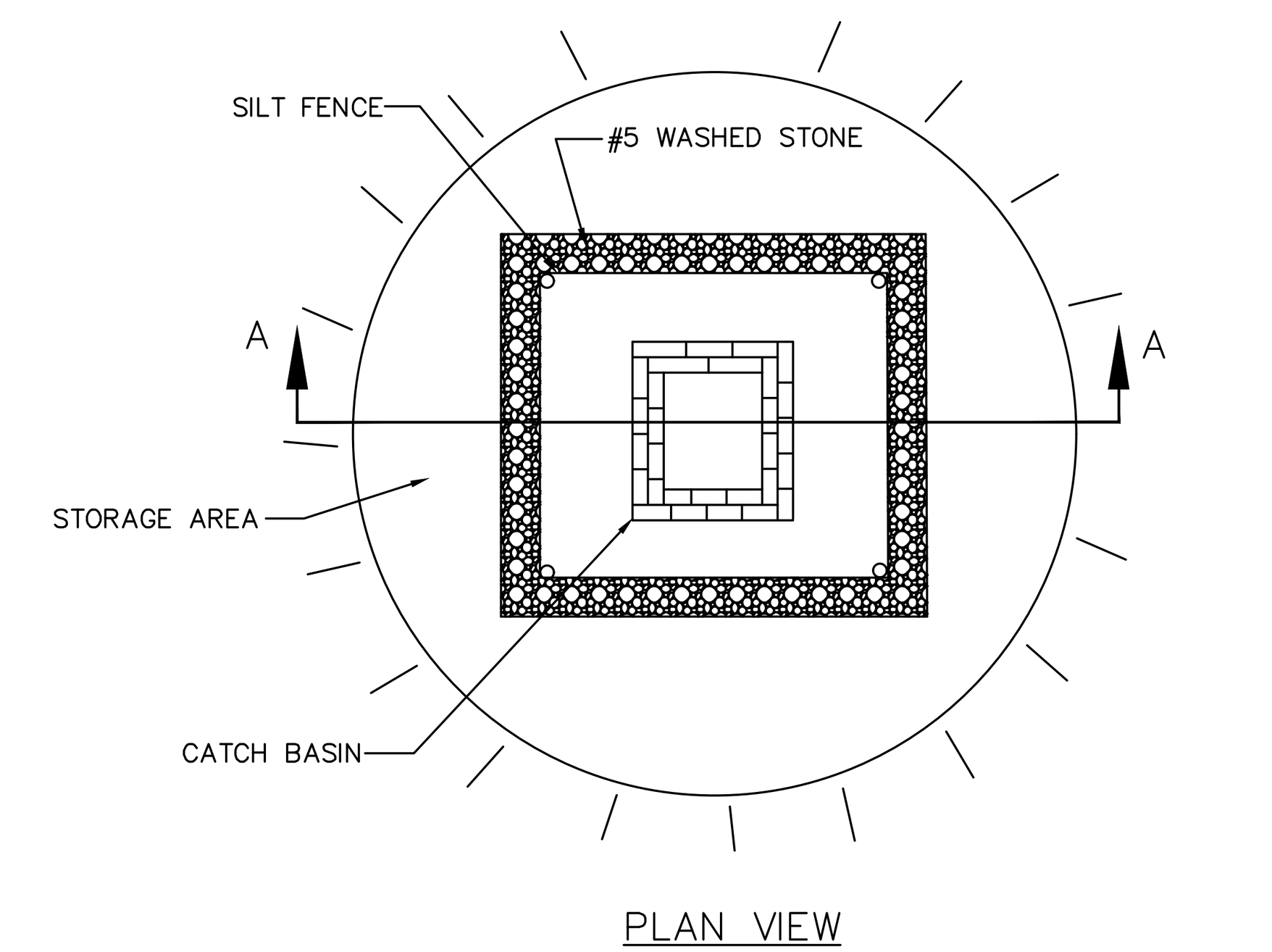

GENERAL NOTES:

1. SEDIMENT SHALL BE REMOVED AND TRAP RESTORED TO ITS ORIGINAL DIMENSIONS WHEN THE SEDIMENT HAS ACCUMULATED TO 1/2 THE DESIGN DEPTH OF THE TRAP.
2. REMOVED SEDIMENT SHALL BE DEPOSITED IN A SUITABLE AREA AND IN SUCH A MANNER THAT IT WILL NOT ERODE.
3. THE STRUCTURE SHALL BE INSPECTED AFTER EACH STORM EVENT BY THE CONTRACTOR OR HIS AGENT AND REPAIRS MADE AS NECESSARY.
4. CONSTRUCTION OPERATIONS SHALL BE CARRIED OUT IN SUCH A MANNER THAT EROSION AND WATER POLLUTION ARE MINIMIZED.
5. THE SEDIMENT TRAP SHALL BE REMOVED AND THE AREA STABILIZED WHEN THE DRAINAGE BASIN HAS BEEN PROPERLY STABILIZED.
6. SILT FENCE INSTALLATION SHALL BE IN ACCORDANCE WITH DETAIL 10/C10.0

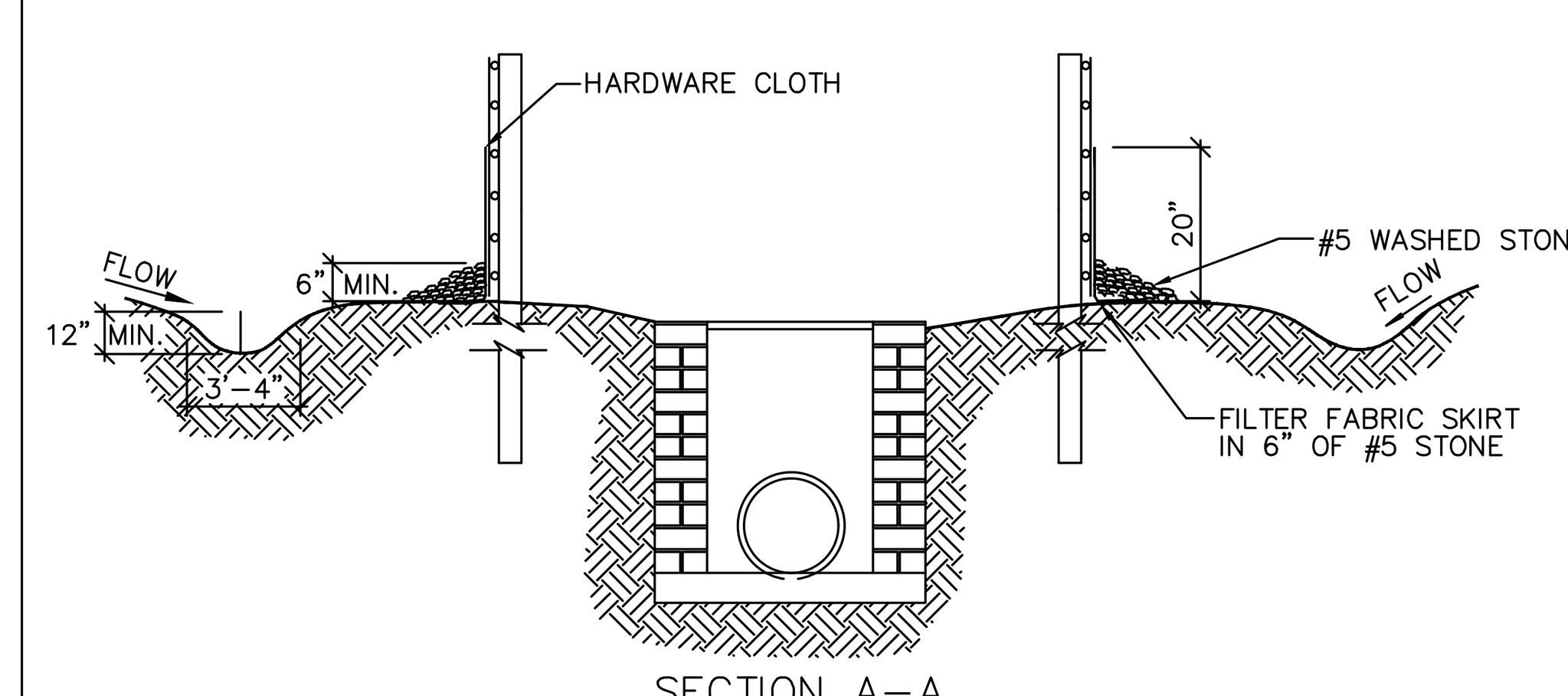

TEMPORARY INLET PROTECTION

N.T.S.

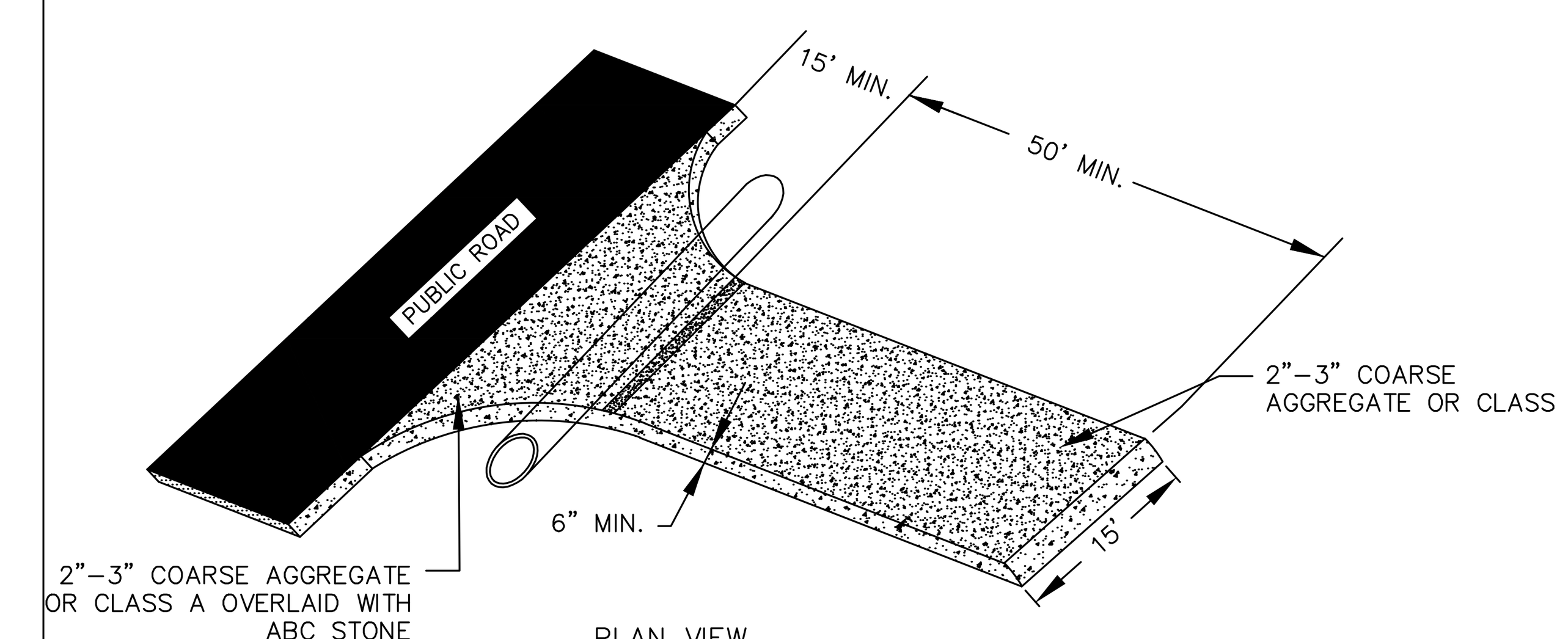

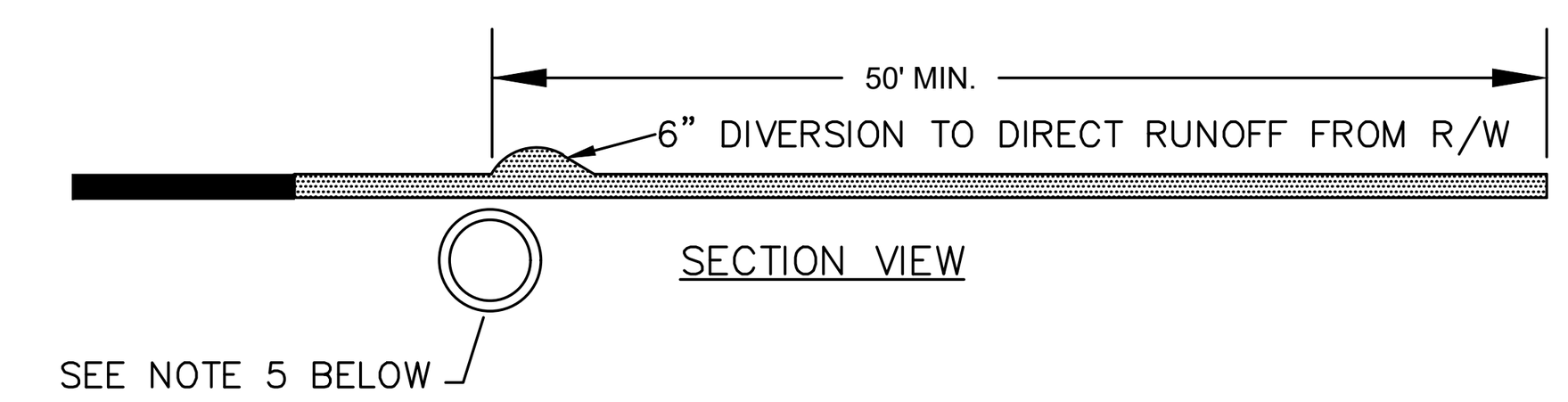

CONSTRUCTION SPECIFICATIONS:

1. CONTRACTOR SHALL REFERENCE NCDOT DRIVEWAY PERMITS FOR ADDITIONAL TEMPORARY CONSTRUCTION ENTRANCE INSTALLATION REQUIREMENTS
1. CLEAR THE ENTRANCE AND EXIT AREA OF ALL VEGETATION, ROOTS, AND OTHER OBJECTIONABLE MATERIAL AND PROPERLY GRADE IT.
2. PLACE THE GRAVEL TO THE SPECIFIC GRADE AND DIMENSIONS SHOWN ON THE PLANS, AND SMOOTH IT OUT.
3. PROVIDE DRAINAGE TO CARRY WATER TO A SEDIMENT TRAP OR OTHER SUITABLE OUTLET.
4. USE GEOTEXTILE FABRICS BECAUSE THEY IMPROVE STABILITY OF THE FOUNDATION IN LOCATIONS SUBJECT TO SEEPAGE OR HIGH WATER TABLE.
5. CONTRACTOR SHALL INSTALL TEMPORARY CULVERTS WHERE REQUIRED PER NCDOT DRIVEWAY PERMITS IN ORDER TO MAINTAIN POSITIVE DRAINAGE.

MAINTENANCE:

1. MAINTAIN THE GRAVEL PAD IN A CONDITION TO PREVENT MUD OR SEDIMENT FROM LEAVING THE CONSTRUCTION SITE. THIS MAY REQUIRE PERIODIC TOP-DRESSING WITH 2-INCH STONE. AFTER EACH RAINFALL, INSPECT ANY STRUCTURE USED TO TRAP SEDIMENT AND CLEAN IT OUT IF NECESSARY. IMMEDIATELY REMOVE ALL OBJECTIONABLE MATERIALS SPILLED, WASHED, OR TRACKED ONTO PUBLIC ROADWAYS.

CONSTRUCTION ENTRANCE

N.T.S.

PRELIMINARY DESIGN - NOT RELEASED FOR CONSTRUCTION, RECORDATION, CONVEYANCES, OR SALES

WK DICKSON
community infrastructure consultants
1320 MAIN STREET
SUITE 400
COLUMBIA, SC 29201
(t)803-786-4261
(f)803-786-4263
WWW.WKDICKSON.COM

NORTH CAROLINA PROFESSIONAL ENGINEER SEAL 033121 BRIAN E. THOMAS 6/28/17
PROFESSIONAL SEAL

REVISION RECORD

NO.	DATE	DESCRIPTION	BY
1.	4/24/17	REVISED PER COMMENTS FROM NCDOT, TOWN OF WEDDINGTON, UCPW, & NCDEQ	JEB
2.	6/6/17	REVISED PER COMMENTS FROM NCDOT, TOWN OF WEDDINGTON, UCPW, & NCDEQ	TAK
3.	6/20/17	REVISED PER COMMENTS FROM TOWN OF WEDDINGTON	WGB
4.	6/28/17	REVISED PER COMMENTS FROM NCDOT	TAK

PROJECT NAME:
GRAHAM ALLEN SUBDIVISION
TOWN OF WEDDINGTON, SANDY RIDGE TOWNSHIP, UNION COUNTY, NC

DRAWING TITLE:
DETAILS - SHEET 4

PROJ. MGR.:	BET
DESIGN BY:	MDJ
DRAWN BY:	MDJ
PROJ. DATE:	OCT. 2016

DRAWING NUMBER:
9.3

WKD PROJ. NO.:
20160191.00.CL

COPYRIGHT © W.K. DICKSON & CO., INC. ALL RIGHTS RESERVED. REPRODUCTION OR USE OF THE CONTENTS OF THIS DOCUMENT, ADDITIONS OR DELETIONS TO THIS DOCUMENT, IN WHOLE OR IN PART, WITHOUT WRITTEN CONSENT OF W.K. DICKSON & CO., INC., IS PROHIBITED. ONLY COPIES FROM THE ORIGINAL OF THIS DOCUMENT, MARKED WITH AN ORIGINAL SIGNATURE AND SEAL SHALL BE CONSIDERED TO BE VALID, TRUE COPIES.

FILE PATH:M:\Projects\Sunbelt Holding SE I\20160191\00CL - Graham Allen Subdivision Redesign CD's\CADD\DWG\Sheets\9.0-9.3 DETAILS.dwg, JBRISTOW, 6/29/2017 10:34:47 AM

WK DICKSON
community infrastructure consultants

COPYRIGHT © W.K. DICKSON & CO., INC. ALL RIGHTS RESERVED. REPRODUCTION OR USE OF THE CONTENTS OF THIS DOCUMENT, ADVITHOUT THE EXPRESS WRITTEN PERMISSION OF W.K. DICKSON & CO., INC. IS PROHIBITED. ANY UNAUTHORIZED REUSE OF THESE PLANS FOR OTHER PROJECTS, EXTENSIONS TO THIS PROJECT, OR ANY OTHER PROJECT BY ANY PARTY SHALL BE AT THE PARTY'S SOLE RISK AND SHALL BE CONSIDERED TO BE UNLAWFUL USE OF THESE PLANS AND DOCUMENTS. REUSE OF THIS DOCUMENT WITHOUT WRITTEN VERIFICATION OR ADAPTATION BY W.K. DICKSON & CO., INC. FOR THE SPECIFIC PURPOSE INTENDED WILL BE AT RECIPIENT'S SOLE RISK AND WITHOUT LIABILITY OR LEGAL EXPOSURE TO W.K. DICKSON & CO., INC. ALL PLANS, DOCUMENTS, OR DIGITAL DATA PREPARED BY W.K. DICKSON & CO., INC. ARE CONSIDERED INSTRUMENTS OF SERVICE AND REMAIN THE PROPERTY OF W.K. DICKSON & CO., INC. ANY REUSE OF THESE MATERIALS WITHOUT THE WRITTEN CONSENT OF W.K. DICKSON & CO., INC. SHALL BE AT THE RECIPIENT'S SOLE RISK AND WITHOUT LIABILITY OR LEGAL EXPOSURE TO W.K. DICKSON & CO., INC. ANY AND ALL CLAIMS ARISING FROM OR ATTRIBUTABLE TO REUSE OF THESE MATERIALS WITHOUT THE WRITTEN CONSENT OF W.K. DICKSON & CO., INC. SHALL BE INDEMNIFIED AND HELD HARMLESS BY THE RECIPIENT. ANY ALTERATION OF THESE PLANS AND DOCUMENTS WITHOUT THE WRITTEN CONSENT OF W.K. DICKSON & CO., INC. SHALL RENDER THEM VOID AND UNUSABLE. ANY ALTERATION OF THESE PLANS AND DOCUMENTS WITHOUT THE WRITTEN CONSENT OF W.K. DICKSON & CO., INC. SHALL BE AT THE RECIPIENT'S SOLE RISK AND WITHOUT LIABILITY OR LEGAL EXPOSURE TO W.K. DICKSON & CO., INC. ANY AND ALL CLAIMS ARISING FROM OR ATTRIBUTABLE TO ALTERATION OF THESE MATERIALS WITHOUT THE WRITTEN CONSENT OF W.K. DICKSON & CO., INC. SHALL BE INDEMNIFIED AND HELD HARMLESS BY THE RECIPIENT. ANY ALTERATION OF THESE PLANS AND DOCUMENTS WITHOUT THE WRITTEN CONSENT OF W.K. DICKSON & CO., INC. SHALL RENDER THEM VOID AND UNUSABLE. ANY ALTERATION OF THESE PLANS AND DOCUMENTS WITHOUT THE WRITTEN CONSENT OF W.K. DICKSON & CO., INC. SHALL BE AT THE RECIPIENT'S SOLE RISK AND WITHOUT LIABILITY OR LEGAL EXPOSURE TO W.K. DICKSON & CO., INC. ANY AND ALL CLAIMS ARISING FROM OR ATTRIBUTABLE TO ALTERATION OF THESE MATERIALS WITHOUT THE WRITTEN CONSENT OF W.K. DICKSON & CO., INC. SHALL BE INDEMNIFIED AND HELD HARMLESS BY THE RECIPIENT.

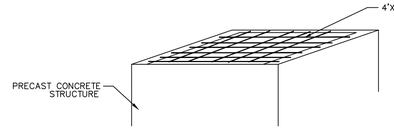

ACCESS COVER (TOP OF BOX) DETAIL

GENERAL NOTES

1. PRECAST STRUCTURES SHALL CONFORM TO LATEST ASTM C-913 SPEC FOR "REINFORCED CONCRETE WATER AND WASTE WATER STRUCTURES."
2. CONCRETE COMPRESSIVE STRENGTH 4000 PSI MINIMUM.
3. STEEL REINFORCING CONFORMS TO LATEST ACI-318 SPECS. FOR REINFORCED CONCRETE.
4. SECTION JOINTS TO BE SEALED WITH BUTYL RUBBER SEALANT SUPPLIED BY VENDOR AND INSTALLED BY CONTRACTOR. EXTERIOR OF JOINTS TO BE WRAPPED WITH 6" BUTYL WRAP SUPPLIED BY VENDOR OF BOX.
5. BARREL (30"ø) CONNECTION AND 12" DIP INLET PIPE TO BE SEALED WITH LINK SEAL CONNECTORS SUPPLIED BY VENDOR AND INSTALLED BY CONTRACTOR.
6. SHOP DRAWINGS MUST BE SUBMITTED AND APPROVED BY THE ENGINEER BEFORE CONSTRUCTION.
7. GEOTECHNICAL ENGINEER SHALL MONITOR DAM AND OUTLET STRUCTURE INSTALLATION
8. BERM EMBANKMENT SHALL BE COMPACTED TO 95% STANDARD PROCTER (ASTM D698) IN LIFTS NOT TO EXCEED 12 INCHES.
9. CONTRACTOR SHALL PROVIDE TO THE ENGINEER, FOR PRIOR APPROVAL, ENGINEERED SHOP DRAWINGS FROM THE STRUCTURE MANUFACTURER INDICATING THE REINFORCING PATTERN, SPACING, COVER, ETC. TO PROVIDE A PERMANENT CONNECTION BETWEEN THE OUTLET STRUCTURE AND THE SLAB.

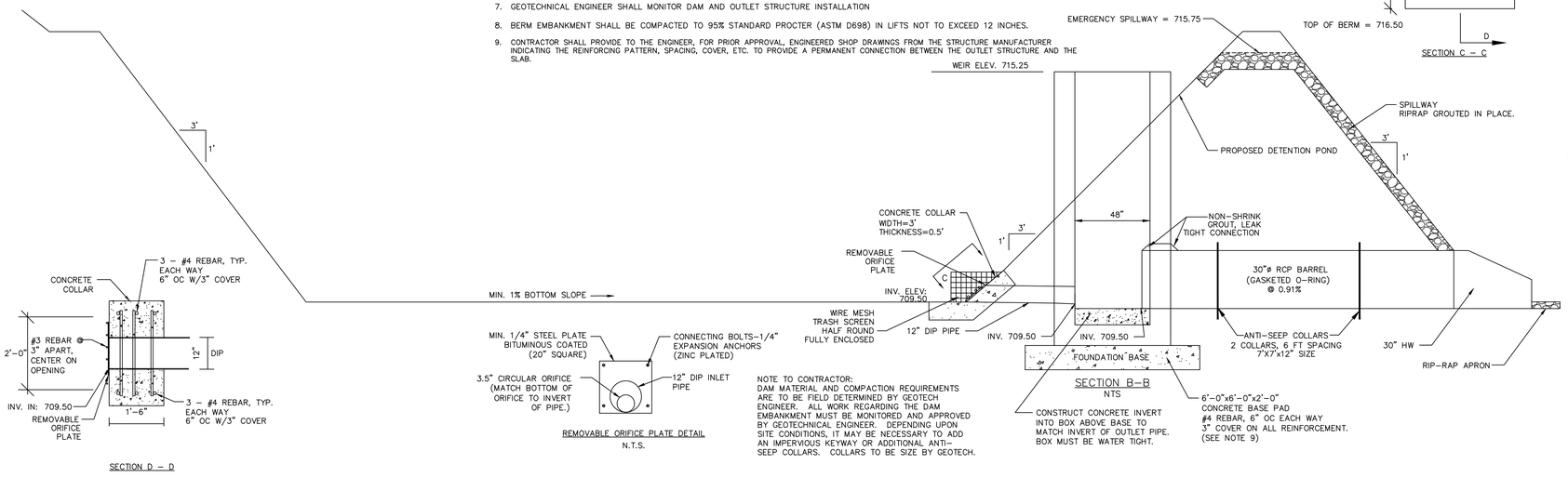

SECTION B-B
NTS

SECTION D - D

REMOVABLE ORIFICE PLATE DETAIL
N.T.S.

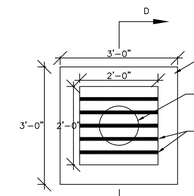

SECTION C - C

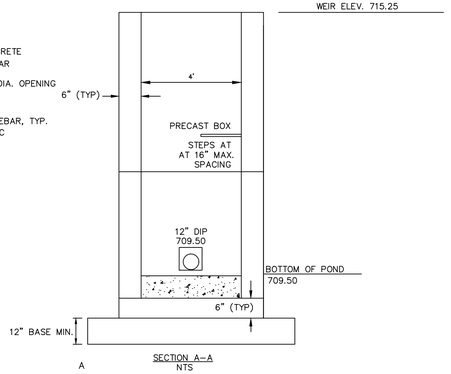

SECTION A-A
NTS

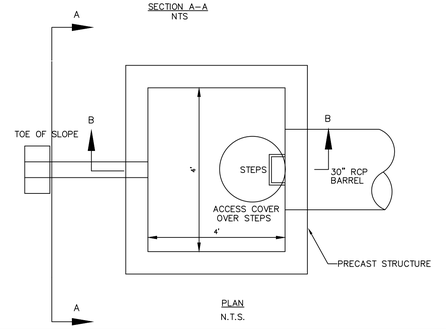

PLAN
N.T.S.

EXTENDED DRY DETENTION BMP #1

N.T.S.

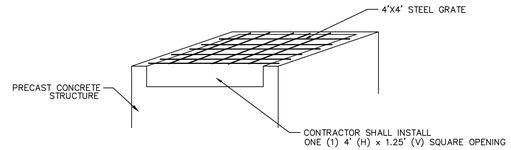

ACCESS COVER (TOP OF BOX) DETAIL

GENERAL NOTES

1. PRECAST STRUCTURES SHALL CONFORM TO LATEST ASTM C-913 SPEC FOR "REINFORCED CONCRETE WATER AND WASTE WATER STRUCTURES."
2. CONCRETE COMPRESSIVE STRENGTH 4000 PSI MINIMUM.
3. STEEL REINFORCING CONFORMS TO LATEST ACI-318 SPECS. FOR REINFORCED CONCRETE.
4. SECTION JOINTS TO BE SEALED WITH BUTYL RUBBER SEALANT SUPPLIED BY VENDOR AND INSTALLED BY CONTRACTOR. EXTERIOR OF JOINTS TO BE WRAPPED WITH 6" BUTYL WRAP SUPPLIED BY VENDOR OF BOX.
5. BARREL (24"ø) CONNECTION AND 12" DIP INLET PIPE TO BE SEALED WITH LINK SEAL CONNECTORS SUPPLIED BY VENDOR AND INSTALLED BY CONTRACTOR.
6. SHOP DRAWINGS MUST BE SUBMITTED AND APPROVED BY THE ENGINEER BEFORE CONSTRUCTION.
7. GEOTECHNICAL ENGINEER SHALL MONITOR DAM AND OUTLET STRUCTURE INSTALLATION
8. BERM EMBANKMENT SHALL BE COMPACTED TO 95% STANDARD PROCTER (ASTM D698) IN LIFTS NOT TO EXCEED 12 INCHES.
9. CONTRACTOR SHALL PROVIDE TO THE ENGINEER, FOR PRIOR APPROVAL, ENGINEERED SHOP DRAWINGS FROM THE STRUCTURE MANUFACTURER INDICATING THE REINFORCING PATTERN, SPACING, COVER, ETC. TO PROVIDE A PERMANENT CONNECTION BETWEEN THE OUTLET STRUCTURE AND THE SLAB.

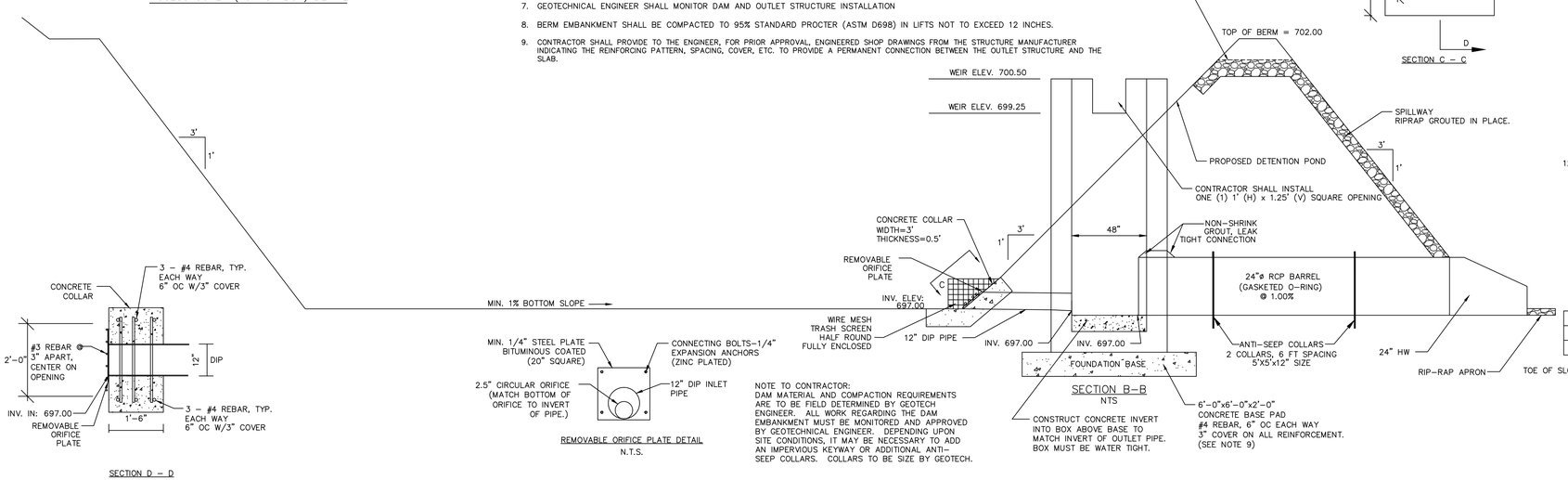

SECTION B-B
NTS

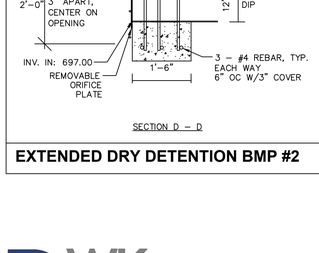

SECTION D - D

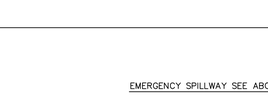

REMOVABLE ORIFICE PLATE DETAIL
N.T.S.

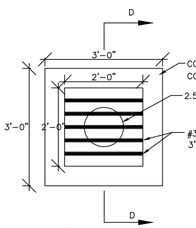

SECTION C - C

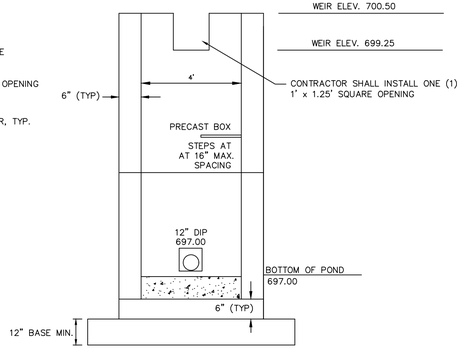

SECTION A-A
NTS

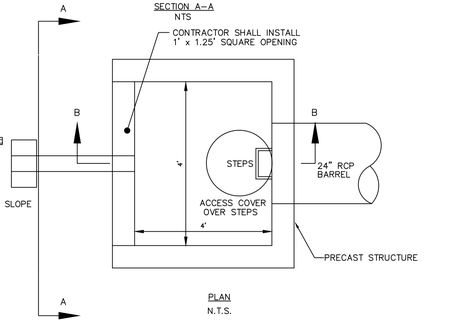

PLAN
N.T.S.

EXTENDED DRY DETENTION BMP #2

N.T.S.

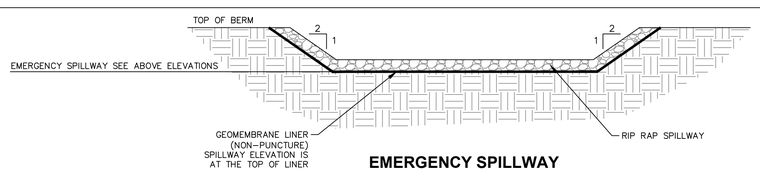

	WIDTH (FT)
POND #1	18.00
POND #2	10.00

EMERGENCY SPILLWAY

PRELIMINARY DESIGN - NOT RELEASED FOR CONSTRUCTION, RECORDATION, CONVEYANCES, OR SALES

REVISION RECORD

NO.	DATE	DESCRIPTION	BY
1	4/24/17	REVISED PER COMMENTS FROM NCDOT, TOWN OF WEDDINGTON, UCPW, & NCDEQ	JEB
2	6/6/17	REVISED PER COMMENTS FROM NCDOT, TOWN OF WEDDINGTON, UCPW, & NCDEQ	TAK
3	6/20/17	REVISED PER COMMENTS FROM TOWN OF WEDDINGTON	WGB
4	6/28/17	REVISED PER COMMENTS FROM NCDOT	TAK

WK DICKSON
community infrastructure consultants
1320 MAIN STREET
SUITE 400
COLUMBIA, SC 29201
(t)803-786-4261
(f)803-786-4263
WWW.WKDICKSON.COM

NORTH CAROLINA PROFESSIONAL SEAL 033121 ENGINEER BRIAN E. THOMAS 6/28/17

PROFESSIONAL SEAL

PROJECT NAME:
GRAHAM ALLEN SUBDIVISION
TOWN OF WEDDINGTON, SANDY RIDGE TOWNSHIP, UNION COUNTY, NC

DRAWING TITLE:
DETAILS - SHEET 5

PROJ. MGR.:	BET
DESIGN BY:	MDJ
DRAWN BY:	MDJ
PROJ. DATE:	OCT. 2016

DRAWING NUMBER:
9.4

WKD PROJ. NO.:
20160191.00.CL

F:\LPATH\UP Projects\Current Hosting\SE\20160191\DOCS - Graham Allen Subdivision Hydrology\SDV\20160191sheet#3 9-5-16 FULL.dwg, @9x17DM, 6/28/2017 10:24:22 AM

COPYRIGHT © W.K. DICKSON & CO., INC. ALL RIGHTS RESERVED. REPRODUCTION OR USE OF THE CONTENTS OF THIS DOCUMENT, ADDITIONS OR DELETIONS TO THE CONTENTS OF THIS DOCUMENT BY ANY METHOD, ELECTRONIC OR OTHERWISE, WITHOUT THE PRIOR WRITTEN CONSENT OF W.K. DICKSON & CO., INC. IS STRICTLY PROHIBITED. ANY UNAUTHORIZED REPRODUCTION OR USE OF THE CONTENTS OF THIS DOCUMENT SHALL BE CONSIDERED TO BE MADE WITH KNOWLEDGE AND INTENT. FROM THE ORIGINAL OF THIS DOCUMENT MARKED WITH AN ORIGINAL SIGNATURE AND SEAL, SHALL BE CONSIDERED TO BE VALID, TRUE COPIES.

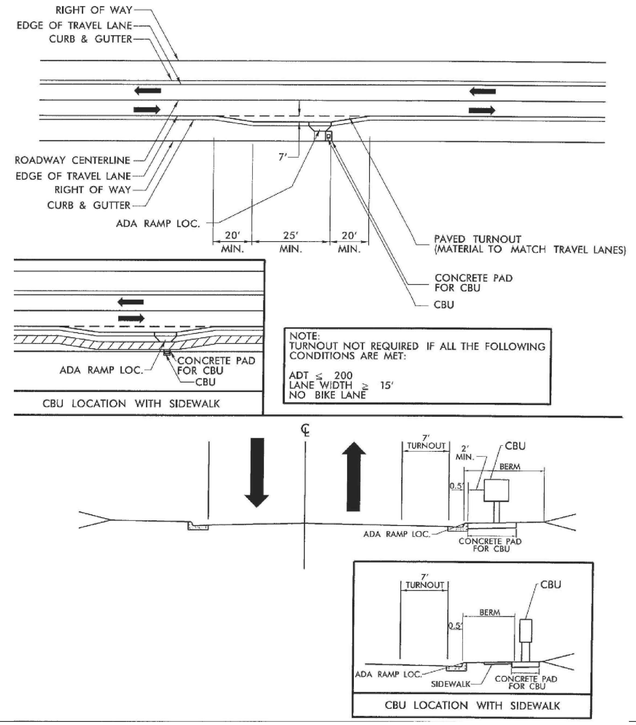

BREAKAWAY CBU PLACEMENT FOR SUBDIVISION

N.T.S.

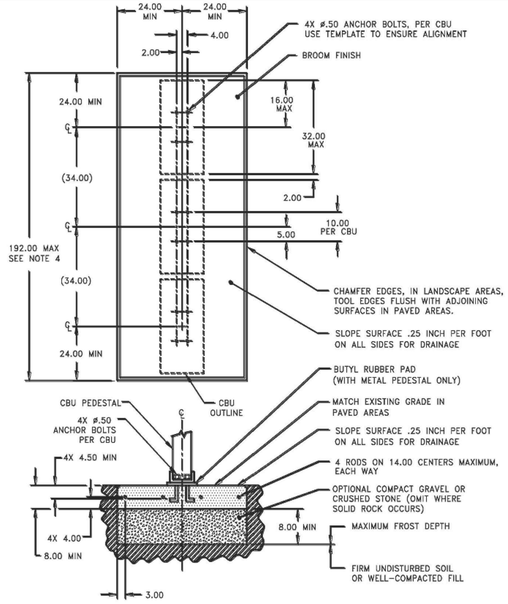

NOTES:

1. CONCRETE SHALL HAVE A COMPRESSIVE STRENGTH OF 3000 PSI @ 28 DAYS, CONTAIN 4% MIN – 6% MAX AIR ENTRAINMENT AND BE PLACED WITH A 3.50 – 4.50 SLUMP IN ACCORDANCE WITH ACI 301.
2. REINFORCING STEEL RODS SHALL CONFORM TO ASTM A615, GRADE 60.
3. ANCHOR BOLTS SHALL CONFORM TO ASTM A193, GRADE B8M, TYPE 316 STAINLESS STEEL.
4. A 3 CBU CONFIGURATION IS DEPICTED. A 2 OR 4 CBU CONFIGURATION MAY BE USED AS LONG AS THEY ARE ARRANGED IN GROUPS SUCH THAT THE OVERALL DIMENSION OF THE CONCRETE BASE DOES NOT EXCEED 192 INCHES.

USPS APPROVED CONCRETE PAD

N.T.S.

NOTES

1. INLET MAINTENANCE SHALL BE DOCUMENTED IN PROJECT LOG BOOK.
2. FILTER TYPES SHALL BE APPROVED BY THE CITY INSPECTOR PRIOR TO INSTALLATION.
3. FILTER BAGS MAY BE REMOVED WHEN SITE IS STABILIZED AT THE DIRECTION OF THE ENGINEER.
4. FILTER BAGS SHALL BE REMOVED PRIOR TO STREET ACCEPTANCE.
5. FILTER BAGS SHALL BE CLEANED OR REPLACED EVERY 7 DAYS AND AFTER EVERY 0.5 RAINFALL (BAG SHALL NOT BE MORE THAN HALF FULL AT ANY TIME).
6. FILTER BAGS SHALL NOT BE ALLOWED IN EXISTING CITY OR NCDOT ROADS.
7. FILTER BAGS SHALL BE PLACED IN ALL STORM DRAINAGE INLETS LOCATED WITHIN THE SITE.

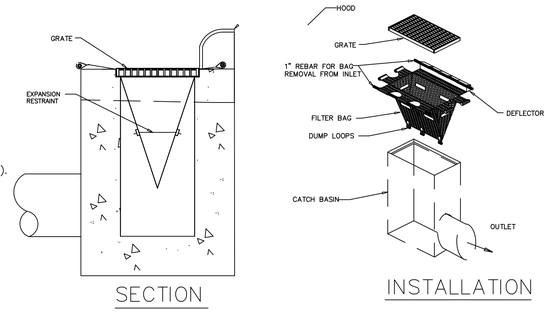

SILT SACKS

N.T.S.

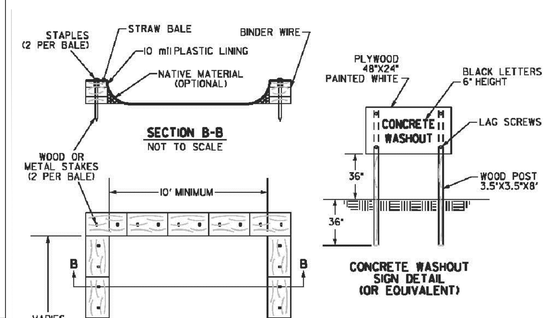

NOTES

1. ACTUAL LAYOUT TO BE DETERMINED IN THE FIELD.
2. A CONCRETE WASHOUT SIGN SHALL BE INSTALLED WITHIN 30' OF THE TEMPORARY CONCRETE WASHOUT FACILITY.
3. MATERIALS USED TO CONSTRUCT TEMPORARY CONCRETE WASHOUT FACILITIES SHALL BE REMOVED FROM THE SITE OF THE WORK AND DISPOSED OF OR RECYCLED.
4. HOLES, DEPRESSIONS OR OTHER GROUND DISTURBANCE CAUSED BY THE REMOVAL OF THE TEMPORARY CONCRETE WASHOUT FACILITIES SHALL BE BACKFILLED, REPAIRED, AND STABILIZED TO PREVENT EROSION.

CONCRETE WASHOUT STATION

N.T.S.

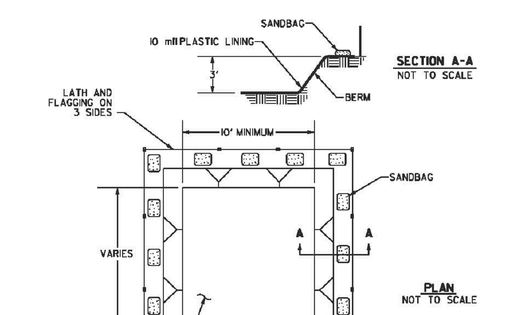

GENERAL NOTES:

1. DOUBLE CATCH BASIN ONLY FOR USE WITHIN TOWN MAINTAINED STREETS. INSTALLATION ON STREETS WITHIN EXISTING/FUTURE NCDOT MAINTAINED RIGHT OF WAY REQUIRES A MINIMUM OF ONE 4 FOOT LONG SECTION OF REINFORCED CONCRETE PIPE BETWEEN CATCH BASINS.
2. SEE NCDOT STANDARD 840.01 FOR DETAILS BASED ON PIPE SIZE PER CROSS-SECTION.
3. CONSTRUCT TWO SINGLE BASINS PER NCDOT STANDARD WITH DOUBLE INTERIOR WALL.
4. ALL CONCRETE TO BE 3600 P.S.I COMPRESSIVE STRENGTH.
5. BASE SLAB SHALL BE MONOLITHIC.
6. SEE DETAILS, THIS SHEET, FOR PLACEMENT OF CATCH BASIN.
7. RCP PIPE SECTION D2 CONNECTING CATCH BASINS SHALL HAVE A MINIMUM DIAMETER SAME AS OF OUTLET PIPE D3.
8. ALL REINFORCING STEEL SHOWN ON NCDOT STANDARDS IS TO BE PROVIDED AS CONTINUOUS MEMBERS. (NO LAPS, USED AS A SINGLE CONTINUOUS BAR IN THE SLAB)

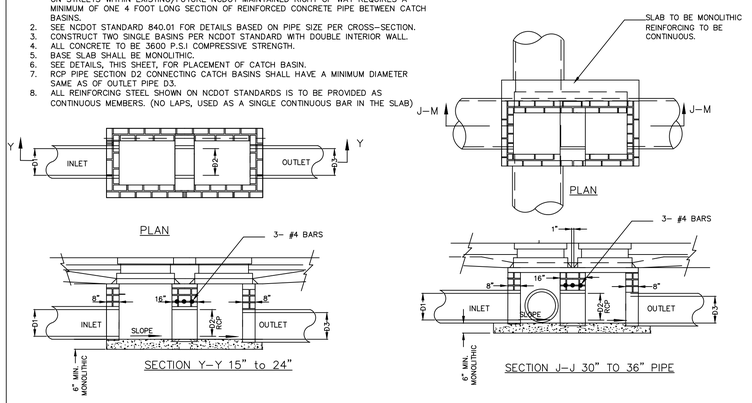

DOUBLE BRICK CATCH BASIN 15"-36" PIPE

N.T.S.

community infrastructure consultants

PRELIMINARY DESIGN - NOT RELEASED FOR CONSTRUCTION, RECORDATION, CONVEYANCES, OR SALES

WK DICKSON
community infrastructure consultants
1320 MAIN STREET
SUITE 400
COLUMBIA, SC 29201
(t)803-786-4261
(f)803-786-4263
WWW.WKDICKSON.COM

NORTH CAROLINA PROFESSIONAL ENGINEER BRIAN E. THOMAS 033121 6/28/17

PROFESSIONAL SEAL

REVISION RECORD

NO.	DATE	DESCRIPTION	BY
1.	4/24/17	REVISED PER COMMENTS FROM NCDOT, TOWN OF WEDDINGTON, UCPW, & NCDEQ	JEB
2.	6/6/17	REVISED PER COMMENTS FROM NCDOT, TOWN OF WEDDINGTON, UCPW, & NCDEQ	TAK
3.	6/20/17	REVISED PER COMMENTS FROM TOWN OF WEDDINGTON	WGB
4.	6/28/17	REVISED PER COMMENTS FROM NCDOT	TAK

PROJECT NAME:
GRAHAM ALLEN SUBDIVISION
TOWN OF WEDDINGTON, SANDY RIDGE TOWNSHIP, UNION COUNTY, NC

DRAWING TITLE:
DETAILS - SHEET 6

PROJ. MGR.:	BET
DESIGN BY:	MDJ
DRAWN BY:	MDJ
PROJ. DATE:	OCT. 2016

DRAWING NUMBER:
9.5

WKD PROJ. NO.:
20160191.00.CL

I:\LEADING\Projects\Graham Allen Subdivision Redesign\CDs\CADD\DGN\Sheets\9.5 DETAILS.dwg, JBRITCH, 6/30/2017 11:33:11 AM

COPYRIGHT © W.K. DICKSON & CO., INC. ALL RIGHTS RESERVED. REPRODUCTION OR USE OF THE CONTENTS OF THIS DOCUMENT, ADDITIONS OR DELETIONS TO THIS DOCUMENT, IN WHOLE OR IN PART, WITHOUT WRITTEN CONSENT OF W.K. DICKSON & CO., INC., IS PROHIBITED. ONLY COPIES FROM THE ORIGINAL OF THIS DOCUMENT, MARKED WITH AN ORIGINAL SIGNATURE AND SEAL SHALL BE CONSIDERED TO BE VALID, TRUE COPIES.

STATE OF NORTH CAROLINA
DEPT. OF TRANSPORTATION
DIVISION OF HIGHWAYS
RALEIGH, N.C.

1-12

ENGLISH STANDARD DRAWING FOR
BRICK CATCH BASIN
12" THRU 54" PIPE

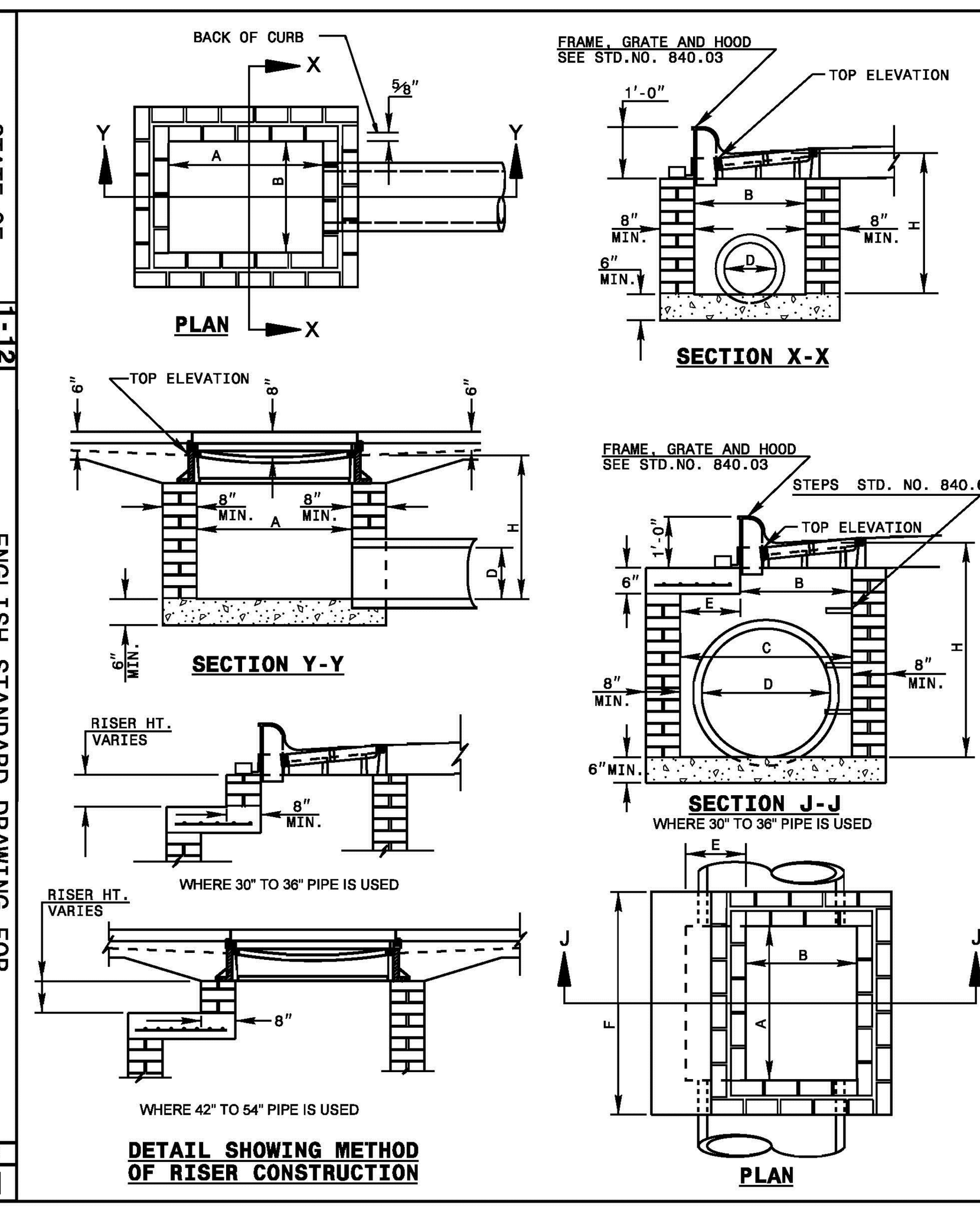

NOTES: MORTAR JOINTS ½" +/- ⅛" THICK.
USE CLASS "B" CONCRETE THROUGHOUT.
USE FORMS FOR CONSTRUCTION OF THE BOTTOM SLAB.
DEDUCT FOR PIPE(S) FROM TOTAL CU. YDS. OF BRICK MASONRY.
USE #4 BAR DOWELS AT 12" CENTERS.
PROVIDE ALL CATCH BASINS OVER 3'-6" IN DEPTH WITH STEPS 12" ON CENTER. USE STEPS WHICH COMPLY WITH STD. DRAWING 840.66.
USE TYPE "E", "F" AND "G" GRATES UNLESS OTHERWISE INDICATED.
USE BRICK OR CONCRETE BLOCK WHICH COMPLIES WITH THE REQUIREMENTS OF SECTION 840 OF THE STANDARD SPECIFICATIONS.
IF REINFORCED CONCRETE PIPE IS SET IN BOTTOM SLAB OF BOX, ADD TO SLAB AS SHOWN ON STD. NO. 840.00.
FOR 8'-0" IN HEIGHT OR LESS, USE 8" WALL. OVER 8'-0" IN HEIGHT, USE 12" WALL TO 6'-0" FROM TOP OF WALL AND 8" WALL FOR THE REMAINING 6'-0". QUANTITES TO BE ADJUSTED ACCORDINGLY.
CONSTRUCT WITH PIPE CROWNS MATCHING.
CHAMFER ALL EXPOSED CORNERS 1".
DRAWING NOT TO SCALE.

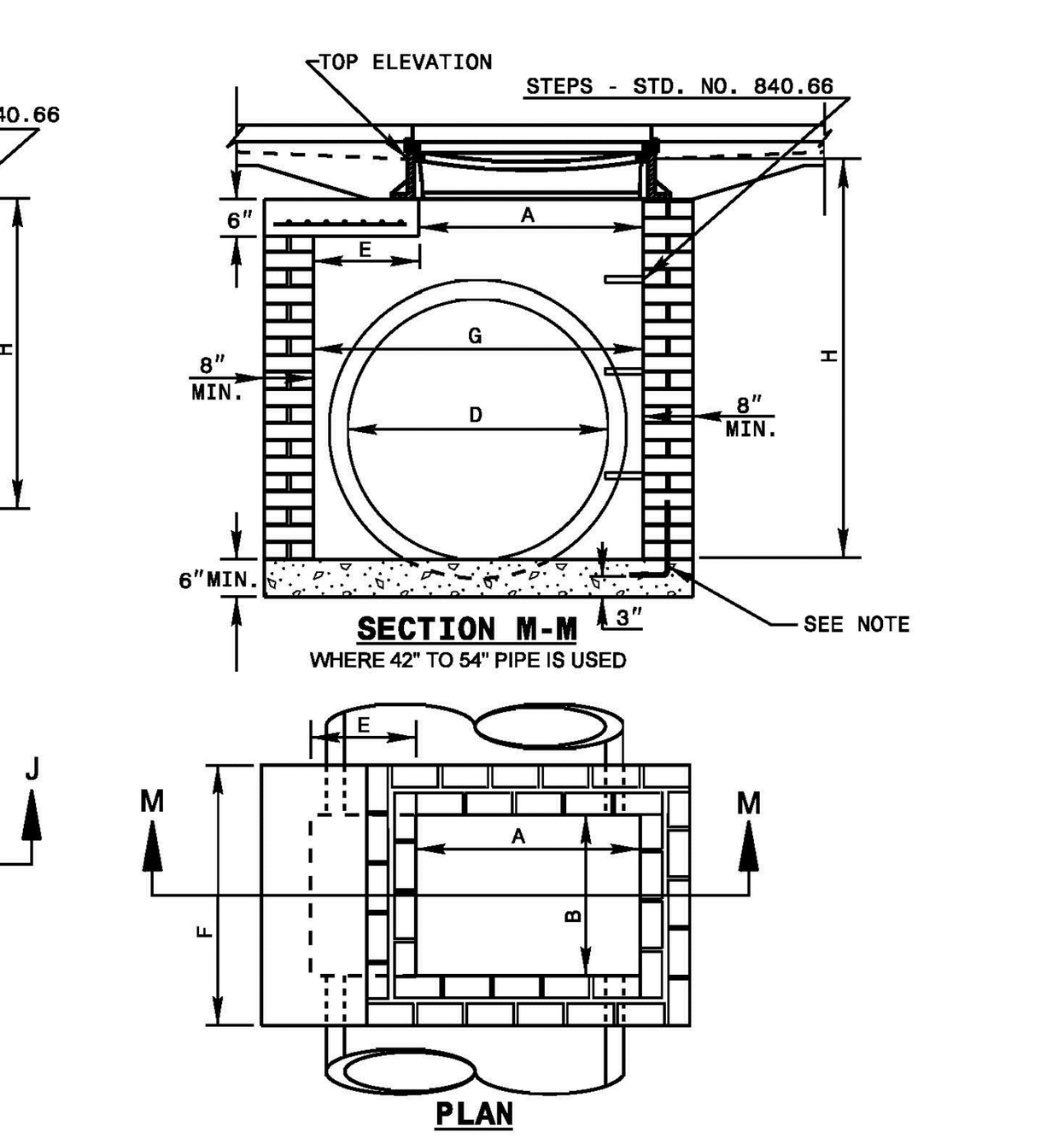

SHEET 1 OF 2
840.01

STATE OF NORTH CAROLINA
DEPT. OF TRANSPORTATION
DIVISION OF HIGHWAYS
RALEIGH, N.C.

1-12

ENGLISH STANDARD DRAWING FOR
BRICK CATCH BASIN
12" THRU 54" PIPE

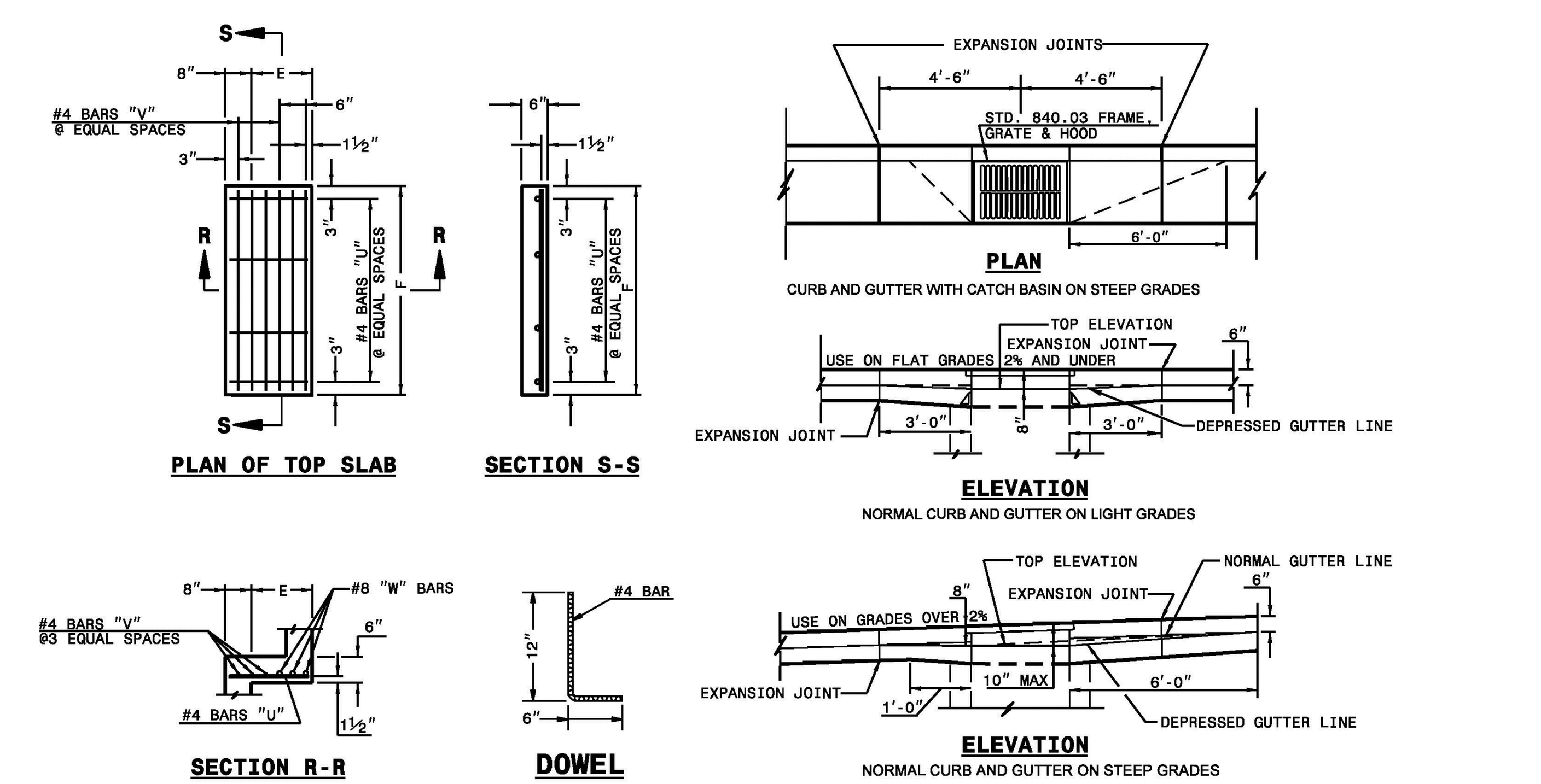

MINIMUM DIMENSIONS AND QUANTITIES FOR BRICK CATCH BASIN (BASED ON MIN. HEIGHT, H, WITH NO RISER)*

PIPE D	SPAN A	WIDTH B	WIDTH C	SPAN G	MIN. HEIGHT H	TOP SLAB DIMENSIONS E	TOP SLAB DIMENSIONS F	BARS-U NO.	BARS-U LENGTH	BARS-V NO.	BARS-V LENGTH	BARS-W NO.	BARS-W LENGTH	TOTAL LBS.	CU.YDS. CONC. IN BOX TOP SLAB	BOTTOM SLAB	TOTAL CONC.	BRICK MASONRY BRICK MSNR. IN WALLS	TOTAL BRICK AND CONCRETE	DEDUCTIONS ONE PIPE C.M.	R.C.
12"	3'-0"	2'-2"	--	--	2'-9"	--	--	--	--	--	--	--	--	--	--	0.281	0.281	0.883	1.164	0.020	0.042
15"	3'-0"	2'-2"			3'-0"											0.281	0.281	0.963	1.244	0.031	0.047
18"	3'-0"	2'-2"			3'-3"											0.281	0.281	1.043	1.324	0.044	0.065
24"	3'-0"	2'-2"			3'-9"											0.281	0.281	1.204	1.485	0.078	0.121
30"	3'-0"	2'-2"	3'-4"		4'-3"	1'-2"	4'-4"	4	1'-6"	3	4'-1"	3	4'-1"	45	0.147	0.374	0.521	1.606	2.217	0.122	0.184
36"	3'-0"	2'-2"	3'-10"		4'-9"	1'-8"	4'-4"	4	2'-0"	4	4'-1"	3	4'-1"	49	0.187	0.415	0.602	1.914	2.516	0.176	0.261
42"	3'-0"	2'-2"		4'-5"	5'-3"	1'-5"	3'-6"	4	1'-9"	3	3'-3"	3	3'-3"	38	0.135	0.373	0.508	2.152	2.660	0.240	0.371
48"	3'-0"	2'-2"		5'-0"	5'-9"	2'-0"	3'-6"	4	2'-6"	4	3'-3"	3	3'-3"	41	0.173	0.410	0.583	2.415	2.998	0.313	0.477
54"	3'-0"	2'-2"		5'-7"	6'-3"	2'-7"	3'-6"	4	3'-0"	6	3'-3"	3	3'-3"	47	0.211	0.448	0.659	2.806	3.465	0.396	0.595

* RISER HAS .321 CUBIC YARDS OF BRICK MASONRY PER FOOT HEIGHT

SHEET 2 OF 2
840.01

STATE OF NORTH CAROLINA
DEPT. OF TRANSPORTATION
DIVISION OF HIGHWAYS
RALEIGH, N.C.

1-12

ENGLISH STANDARD DRAWING FOR
PRECAST CONCRETE ENDWALL
FOR SINGLE 12" THRU 72" PIPE - 90° SKEW

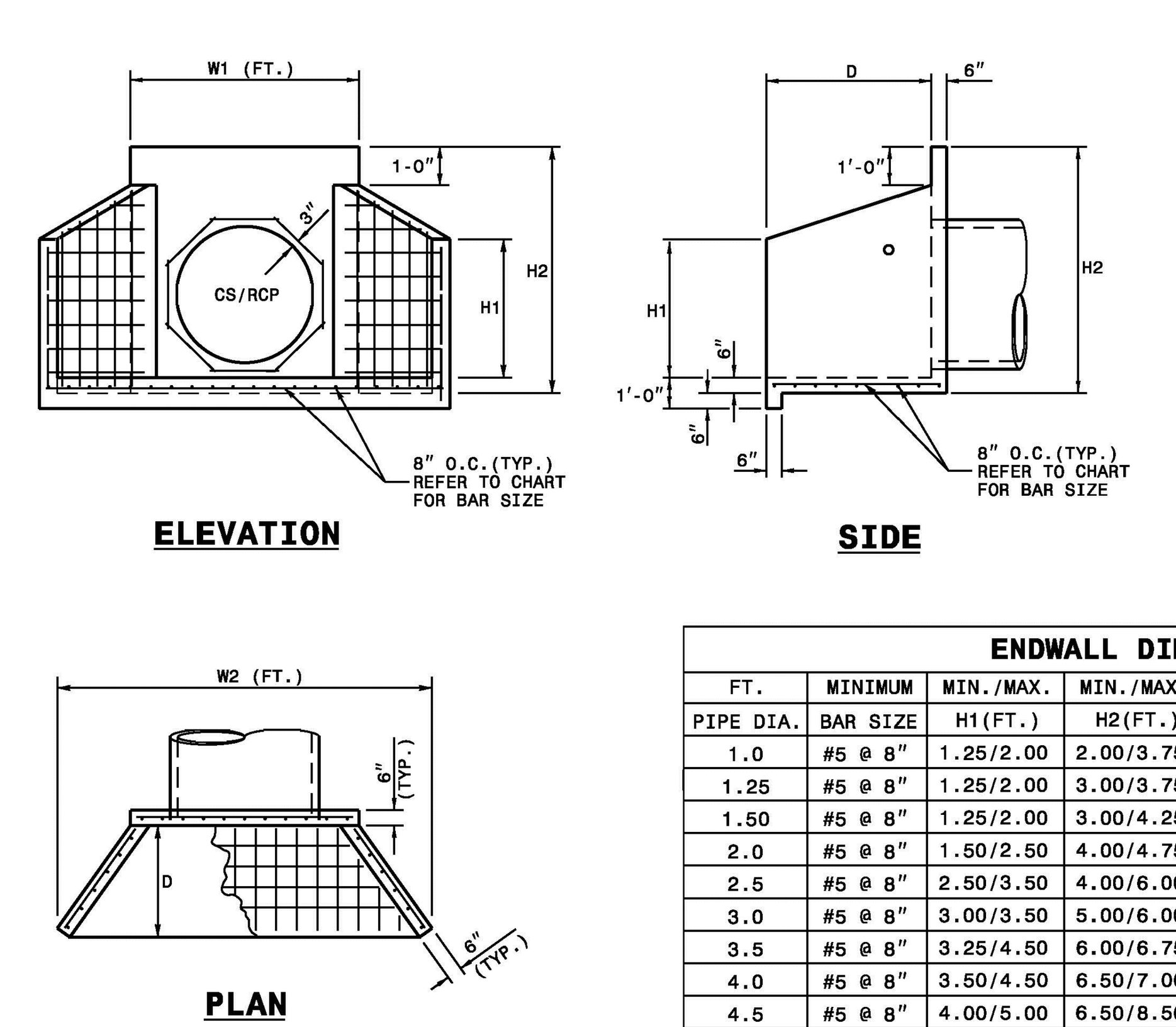

NOTES:

* THIS PRECAST ENDWALL MAY BE USED FOR THE FOLLOWING STANDARDS: 838.01, 838.11, 838.21, 838.27, 838.33, 838.39, 838.51, 838.57, 838.63 AND 838.69.
* INSTALL PRECAST ENDWALLS WITH WINGS AND PAY FOR IN ACCORDANCE WITH SPECIFICATION SECTION 838.
* USE 4000 PSI CONCRETE.
* PROVIDE ALL REINFORCING STEEL WHICH MEETS ASTM A615 FOR GRADE 60 AND WELDED WIRE FABRIC CONFORMING TO ASTM A185 WITH 2" MIN. CLEARANCE.
* PLACE LIFT HOLES OR PINS IN ACCORDANCE WITH OSHA STANDARD 1926.704.
* PIPE TO BE GROUTED INTO HEADWALL AT JOB SITE BY CONTRACTOR
* ALL ELEMENTS PRECAST TO MEET ASTM C913.
* WELDED WIRE FABRIC MAY BE SUBSTITUTED FOR REBAR AS LONG AS THE SAME AREA OF STEEL IS PROVIDED.
* CHAMFER ALL CORNERS 1" OR HAVE A RADIUS OF 1".

NOTE: THE MINIMUM BAR SIZE SHALL BE #5 BARS AT 8" CTS. THE CONTRACTOR WILL HAVE THE OPTION TO INCREASE THIS BAR SIZE AS NEEDED.

ENDWALL DIMENSIONS

FT. PIPE DIA.	MINIMUM BAR SIZE	MIN./MAX. H1(FT.)	MIN./MAX. H2(FT.)	MIN./MAX. D (FT.)	MIN./MAX. W1	MIN./MAX. W2
1.0	#5 @ 8"	1.25/2.00	2.00/3.75	1.25/1.75	3.00/3.75	5.50/6.00
1.25	#5 @ 8"	1.25/2.00	3.00/3.75	1.25/2.00	3.50/3.75	6.50/6.75
1.50	#5 @ 8"	1.25/2.00	3.00/4.25	1.50/2.50	3.50/3.75	6.50/6.75
2.0	#5 @ 8"	1.50/2.50	4.00/4.75	1.75/2.50	4.00/4.25	7.50/8.25
2.5	#5 @ 8"	2.50/3.50	4.00/6.00	2.00/3.00	4.50/5.50	10.00/11.50
3.0	#5 @ 8"	3.00/3.50	5.00/6.00	2.75/3.50	5.25/5.75	11.50/11.75
3.5	#5 @ 8"	3.25/4.50	6.00/6.75	3.25/3.50	6.00/6.75	12.00/13.25
4.0	#5 @ 8"	3.50/4.50	6.50/7.00	3.25/3.50	6.50/6.75	13.00/13.25
4.5	#5 @ 8"	4.00/5.00	6.50/8.50	3.25/4.00	7.00/9.25	13.50/15.75
5.0	#5 @ 8"	4.50/5.00	7.00/8.50	3.25/4.00	7.25/9.25	13.75/15.75
5.5	#5 @ 8"	4.50/5.00	7.50/8.50	3.25/4.00	7.25/9.25	14.00/15.75
6.0	#5 @ 8"	4.50/5.00	7.50/8.50	3.25/4.00	7.75/9.25	14.75/16.75

SHEET 1 OF 1
838.80

STATE OF NORTH CAROLINA
DEPT. OF TRANSPORTATION
DIVISION OF HIGHWAYS
RALEIGH, N.C.

1-12

ENGLISH STANDARD DRAWING FOR
BRICK DROP INLET
12" THRU 30" PIPE

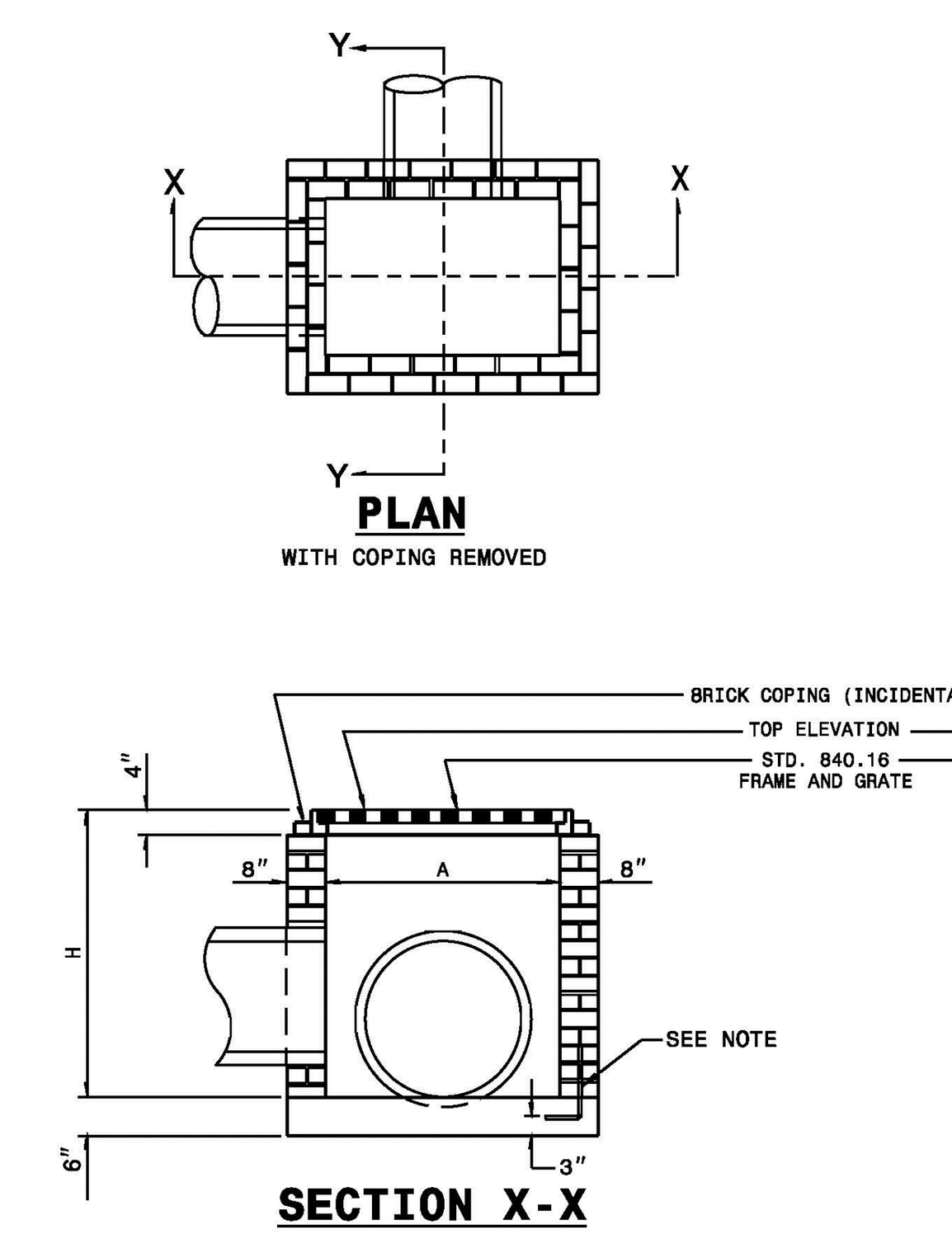

GENERAL NOTES:
MORTAR JOINTS ½" +/- ⅛" THICK.
USE CLASS "B" CONCRETE THROUGHOUT.
USE FORMS FOR CONSTRUCTION OF THE BOTTOM SLAB.
USE #4 BAR DOWELS AT 12" CENTERS.
DEDUCT FOR PIPE(S) FROM TOTAL CU. YDS. OF BRICK MASONRY.
PROVIDE ALL CATCH BASINS OVER 3'-6" IN DEPTH WITH STEPS 12" ON CENTER. USE STEPS WHICH COMPLY WITH STD. DRAWING 840.66.
USE BRICK OR CONCRETE BLOCK WHICH COMPLIES WITH THE REQUIREMENTS OF SECTION 840 OF THE STANDARD SPECIFICATIONS.
IF REINFORCED CONCRETE PIPE IS SET IN BOTTOM SLAB OF BOX, ADD TO SLAB AS SHOWN ON STD. NO. 840.00.
FOR 8'-0" IN HEIGHT OR LESS, USE 8" WALL. OVER 8'-0" IN HEIGHT, USE 12" WALL TO 6'-0" FROM TOP OF WALL AND 8" WALL FOR THE REMAINING 6'-0". QUANTITES TO BE ADJUSTED ACCORDINGLY.
CONSTRUCT WITH PIPE CROWNS MATCHING.
SEE STANDARD DRAWING 840.25 FOR ATTACHMENT OF FRAMES AND GRATES.
DO NOT USE BRICK MASONRY DROP INLET IN LOCATIONS SUBJECT TO TRAFFIC.
CHAMFER ALL EXPOSED CORNERS 1".
DRAWING NOT TO SCALE.

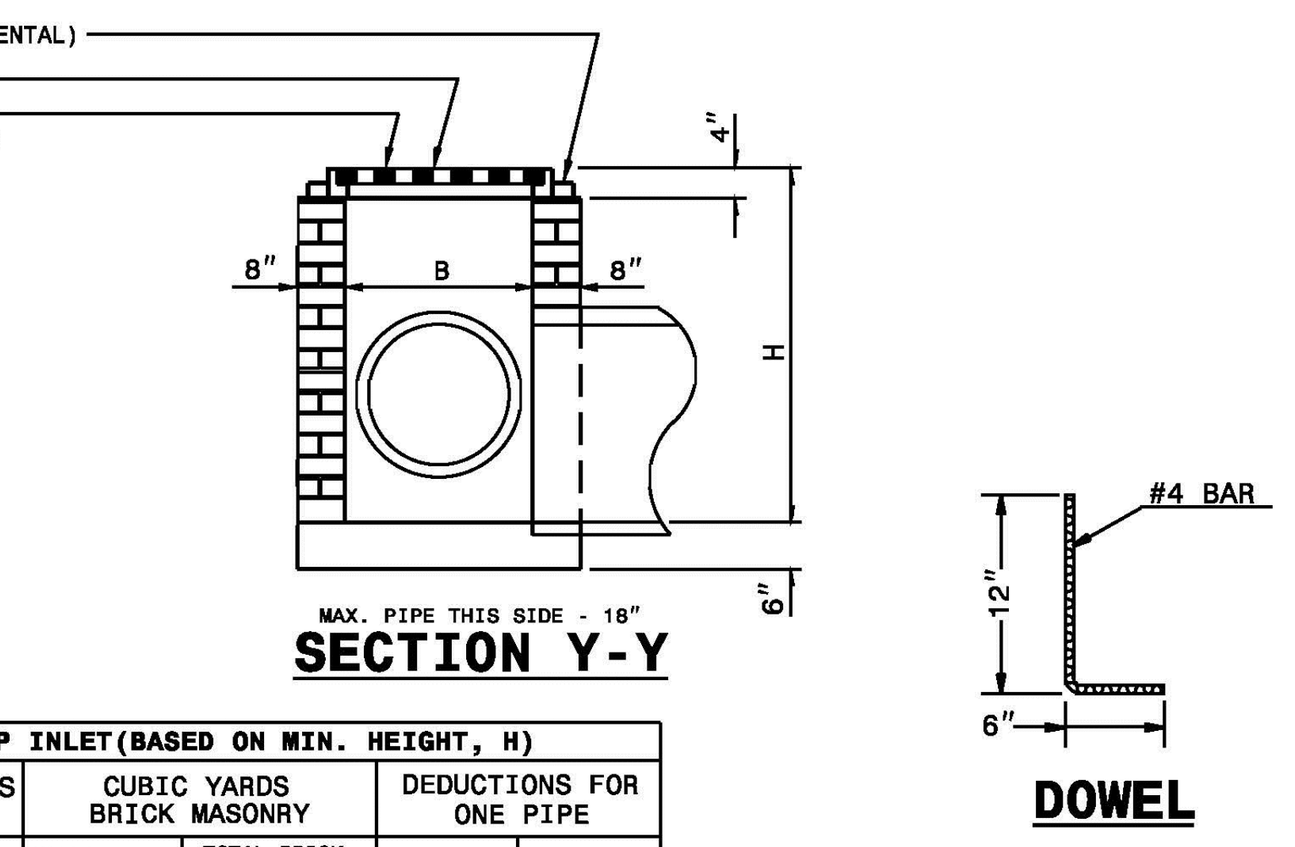

DIMENSIONS AND QUANTITIES FOR DROP INLET (BASED ON MIN. HEIGHT, H)

PIPE D	SPAN A	WIDTH B	MIN. HEIGHT H	CUBIC YARDS CONCRETE BOTTOM SLAB	CUBIC YARDS BRICK MASONRY WALL PER FOOT HT.	TOTAL BRICK MASONRY FOR MIN. HEIGHT, H	DEDUCTIONS FOR ONE PIPE C.S.	R.C.
12"	3'-0"	2'-0"	2'-0"	0.268	0.313	0.522	0.020	0.032
15"			2'-3"	0.268	0.313	0.600	0.031	0.047
18"			2'-6"	0.268	0.313	0.678	0.044	0.065
24"			3'-0"	0.268	0.313	0.835	0.078	0.113
30"	3'-0"	2'-0"	3'-6"	0.268	0.313	0.991	0.122	0.170

SHEET 1 OF 1
840.15

STATE OF NORTH CAROLINA
DEPT. OF TRANSPORTATION
DIVISION OF HIGHWAYS
RALEIGH, N.C.

1-12

ENGLISH STANDARD DRAWING FOR
BRICK JUNCTION BOX
(WITH OPTIONAL MANHOLE)
12" THRU 66" PIPE

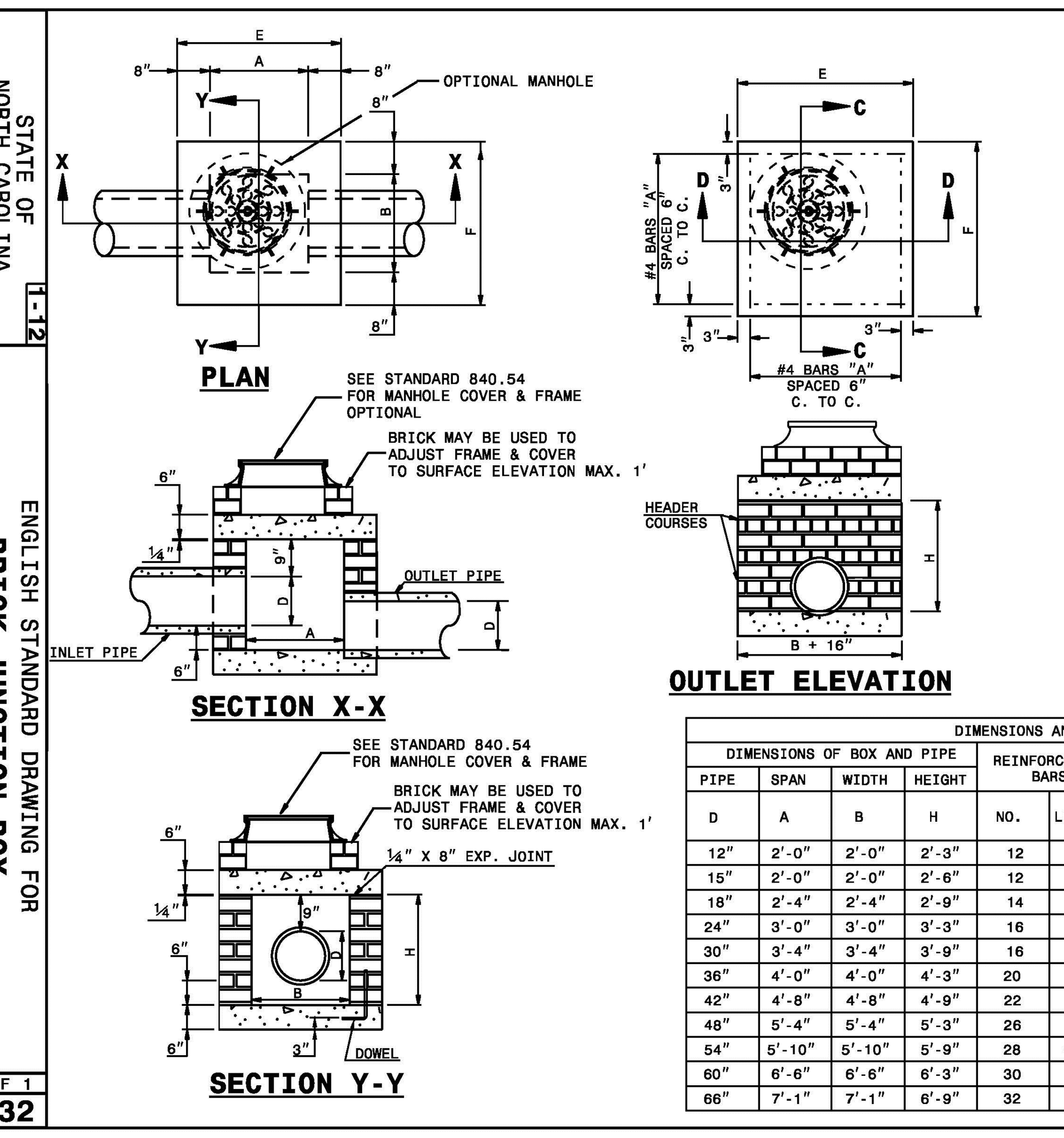

GENERAL NOTES:
CHAMFER ALL EXPOSED CORNERS 1".
USE CLASS "B" CONCRETE THROUGHOUT.
USE #4 BAR DOWELS AT 12" CENTERS.
MORTAR JOINTS ½" ± ⅛" THICK.
CONCAVE TOO ALL EXPOSED JOINTS.
USE FORMS TO CONSTRUCT THE BOTTOM SLAB.
JUMBO BRICK WILL BE PERMITTED. CONCRETE BRICK OR 4" SOLID CONCRETE BLOCKS MAY BE USED IN LIEU OF CLAY BRICK.
FOR 8'-0" IN HEIGHT OR LESS, USE 8" WALL. OVER 8'-0" IN HEIGHT, USE 12" WALL TO 6'-0" FROM TOP OF WALL, AND 8" WALL FOR THE REMAINING 6'-0". ADJUST DIMENSIONS AND QUANTITIES ACCORDINGLY.
IF REINFORCED CONCRETE PIPE IS SET IN BASE SLAB OF BOX, ADD TO BASE AS SHOWN ON STANDARD NO. 840.00.
PROVIDE ALL JUNCTION BOXES OVER 3'-6" IN DEPTH WITH STEPS 12" ON CENTERS IN ACCORDANCE WITH STD. NO. 840.66.
ADJUST THE STEEL, CONCRETE AND BRICK MASONRY QUANTITIES TO INCLUDE THE ADDITION OF THE MANHOLE (I.E. DIAGONAL BARS SHORTENED AROUND OPENING IN TOP SLAB, ADDITIONAL VARIABLE HEIGHT BRICK MASONRY, OPENING IN TOP SLAB.)
MAX. DEPTH OF THIS STRUCTURE FROM TOP OF BOTTOM SLAB TO TOP ELEVATION IS 12 FEET.

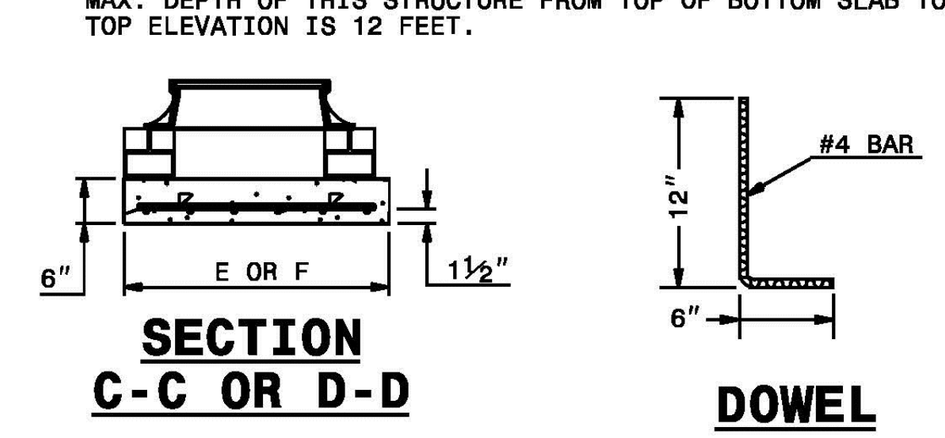

DIMENSIONS AND QUANTITIES FOR BRICK JUNCTION BOXES

PIPE D	SPAN A	WIDTH B	HEIGHT H	REINFORCEMENT BARS NO.	LENGTH	TOP SLAB DIMENSIONS E	F	CUBIC YARDS CONC. TOP & BOTTOM CU. YD.	BRICK MASONRY MIN. HEIGHT CU. YD.	WALL PER FT. HT. CU. YD.	DEDUCTIONS FOR ONE PIPE CU.YDS. C.S.	R.C.
12"	2'-0"	2'-0"	2'-3"	12	3'-1"	3'-4"	3'-4"	0.412	0.591	0.263	0.020	0.032
15"	2'-0"	2'-0"	2'-6"	12	3'-1"	3'-4"	3'-4"	0.412	0.657	0.263	0.031	0.047
18"	2'-4"	2'-4"	2'-9"	14	3'-5"	3'-8"	3'-8"	0.498	0.814	0.296	0.044	0.065
24"	3'-0"	3'-0"	3'-3"	16	4'-1"	4'-4"	4'-4"	0.695	1.176	0.362	0.078	0.113
30"	3'-4"	3'-4"	3'-9"	16	4'-5"	4'-8"	4'-8"	0.807	1.481	0.395	0.122	0.170
36"	4'-0"	4'-0"	4'-3"	20	5'-1"	5'-4"	5'-4"	1.053	1.959	0.461	0.176	0.238
42"	4'-8"	4'-8"	4'-9"	22	5'-9"	6'-0"	6'-0"	1.333	2.503	0.527	0.240	0.323
48"	5'-4"	5'-4"	5'-3"	26	6'-5"	6'-8"	6'-8"	1.646	2.940	0.560	0.313	0.422
54"	5'-10"	5'-10"	5'-9"	28	6'-11"	7'-2"	7'-2"	1.902	3.502	0.609	0.396	0.535
60"	6'-6"	6'-6"	6'-3"	30	7'-7"	7'-10"	7'-10"	2.272	4.113	0.658	0.489	0.660
66"	7'-1"	7'-1"	6'-9"	32	8'-2"	8'-5"	8'-5"	2.624	4.778	0.708	0.591	0.798

SHEET 1 OF 1
840.32

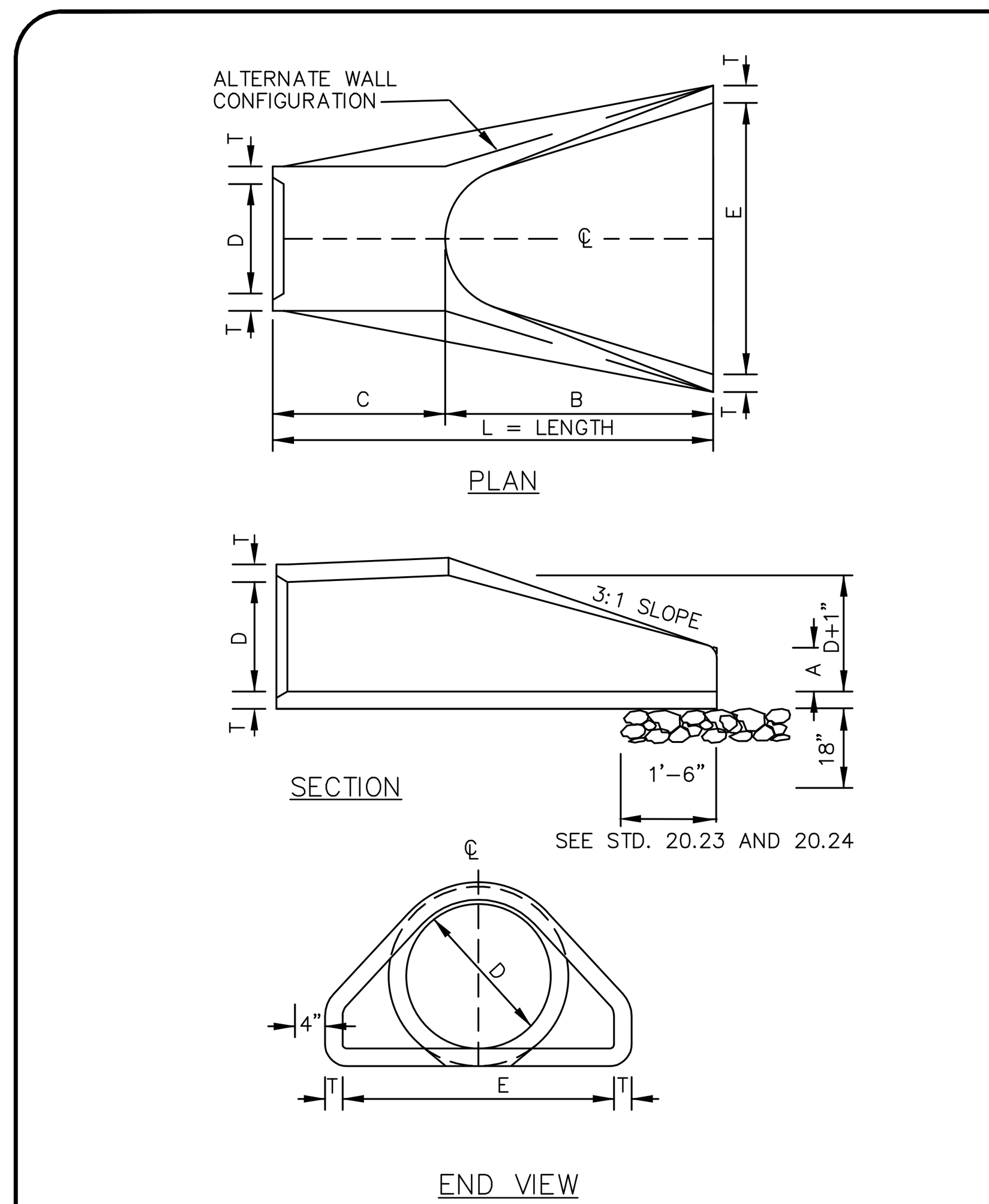

TABLE OF DIMENSIONS

D	T	A	B	C	E	L	WT.
12"	2-1/4"	4"	2'-0"	4'-1"	2'-0"	6'-1"	730
15"	2-1/4"	6"	2'-3"	3'-10"	2'-0"	6'-1"	730
18"	2-1/2"	9"	2'-3"	3'-10"	3'-0"	6'-1"	1190
24"	3"	10"	3'-8"	2'-6"	4'-0"	6'-2"	1770
30"	3-1/2"	1'-0"	4'-6"	1'-8"	5'-0"	6'-2"	2380
36"	4"	1'-3"	5'-3"	2'-11"	6'-0"	8'-2"	5320
42"	4-1/2"	1'-9"	5'-3"	2'-11"	6'-6"	8'-2"	5920
48"	5"	2'-0"	6'-0"	2'-2"	7'-0"	8'-2"	7470
54"	5-1/2"	2'-3"	5'-6"	2'-10"	7'-6"	8'-4"	8810
60"	6"	2'-6"	5'-0"	3'-3"	8'-0"	8'-3"	11180
66"	6-1/2"	3'-0"	6'-0"	2'-3"	8'-6"	8'-3"	12530
72"	7"	3'-0"	6'-6"	1'-9"	9'-0"	8'-3"	13980

GENERAL NOTES:

1. SEE FORMER NCDOT STANDARD 310.01 FOR DETAILS.
2. REINFORCEMENT SHALL CONFORM TO THE REQUIREMENTS OF REINFORCED CONCRETE PIPE OF LIKE DIAMETER PER AASHTO M170, TABLE 2, WALL B.
3. ALL CONCRETE TO BE 3600 P.S.I COMPRESSIVE STRENGTH.
4. PROVIDE TONGUE OR SPIGOT JOINT AT INLET END SECTION.
5. PROVIDE GROOVE OR BELL JOINT AT OUTLET END SECTION.
6. THE DIMENSIONS FOR END SECTIONS SHALL SUBSTANTIALLY AGREE WITH THE TABLE. MINOR VARIATIONS WILL BE PERMITTED BASED ON THE MANUFACTURER'S STANDARD FORMS AND TEMPLATES.
7. NOT TO BE USED IN NCDOT MAINTAINED RIGHT OF WAY.

NOT TO SCALE

CHARLOTTE.
CITY OF CHARLOTTE
LAND DEVELOPMENT STANDARDS
INCLUDES CHARLOTTE ETJ

FLARED END SECTION
12" THRU 72" PIPE

STD. NO.	REV.
20.22	1

WK DICKSON
community infrastructure consultants

1320 MAIN STREET
SUITE 400
COLUMBIA, SC 29201
(t)803-786-4261
(f)803-786-4263
WWW.WKDICKSON.COM

NORTH CAROLINA PROFESSIONAL SEAL 033121 ENGINEER BRIAN E. THOMAS 6/28/17
PROFESSIONAL SEAL

REVISION RECORD

NO.	DATE	DESCRIPTION	BY
1.	4/24/17	REVISED PER COMMENTS FROM NCDOT, TOWN OF WEDDINGTON, UCPW, & NCDEQ	JEB
2.	6/6/17	REVISED PER COMMENTS FROM NCDOT, TOWN OF WEDDINGTON, UCPW, & NCDEQ	TAK
3.	6/20/17	REVISED PER COMMENTS FROM TOWN OF WEDDINGTON	WGB
4.	6/28/17	REVISED PER COMMENTS FROM NCDOT	TAK

PRELIMINARY DESIGN - NOT RELEASED FOR CONSTRUCTION, RECORDATION, CONVEYANCES, OR SALES

PROJECT NAME:
GRAHAM ALLEN SUBDIVISION
TOWN OF WEDDINGTON, SANDY RIDGE TOWNSHIP, UNION COUNTY, NC

DRAWING TITLE:
DETAILS - SHEET 7

PROJ. MGR.:	BET
DESIGN BY:	MDJ
DRAWN BY:	MDJ
PROJ. DATE:	OCT. 2016

DRAWING NUMBER:
9.6

WKD PROJ. NO.:
20160191.00.CL

WK DICKSON
community infrastructure consultants

FILE PATH:M:\Projects\Sunbelt Holding SE I\20160191\00CL - Graham Allen Subdivision Redesign CD's\CADD\DWG\Sheets\9.0-9.3 DETAILS.dwg, JBRISTOW, 6/29/2017 10:35:17 AM

COPYRIGHT © W.K. DICKSON & CO., INC. ALL RIGHTS RESERVED. REPRODUCTION OR USE OF THE CONTENTS OF THIS DOCUMENT, ADDITIONS OR ALTERATIONS BY ANY METHOD, ELECTRONIC OR OTHERWISE, WITHOUT THE PRIOR WRITTEN PERMISSION OF W.K. DICKSON & CO., INC. IS STRICTLY PROHIBITED. ANY REUSE, MODIFICATIONS, ADDITIONS OR ALTERATIONS TO THIS DOCUMENT WITHOUT THE PRIOR WRITTEN PERMISSION OF W.K. DICKSON & CO., INC. WILL BE AT USER'S SOLE RISK AND WITHOUT LIABILITY TO W.K. DICKSON & CO., INC. AND USER SHALL INDEMNIFY AND HOLD W.K. DICKSON & CO., INC. HARMLESS AGAINST ALL DAMAGES, LIABILITIES OR COSTS ARISING FROM SUCH USE. ANY REPRODUCTION OF THIS DOCUMENT WHICH DOES NOT CONTAIN THIS NOTICE IN ITS ENTIRETY, OR ANY REPRODUCTION FROM WHICH THIS NOTICE HAS BEEN REMOVED, ALTERED OR OBSCURED, SHALL BE CONSIDERED TO BE NULL AND VOID. THE ORIGINAL OF THIS DOCUMENT MARKED WITH AN ORIGINAL SIGNATURE AND SEAL SHALL BE CONSIDERED TO BE THE ONLY VALID VERSION.

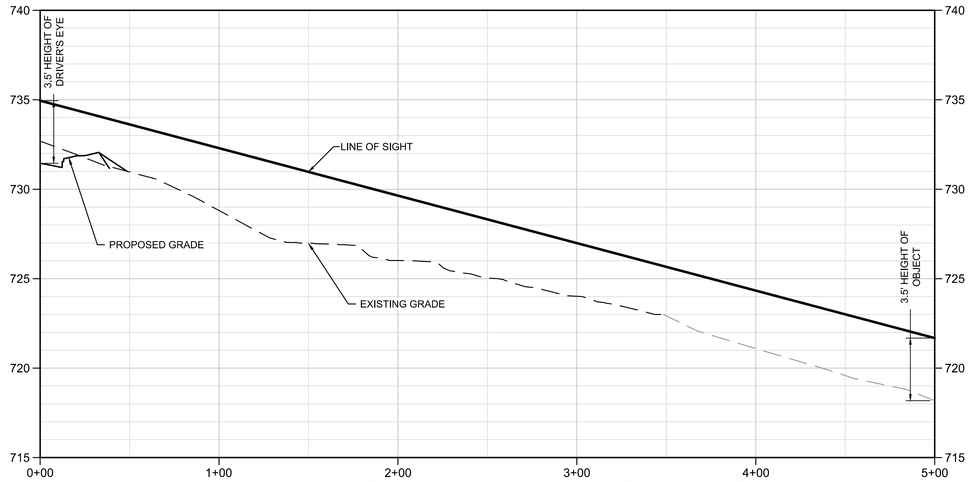

RIGHT HORIZONTAL SIGHT DISTANCE - ANTIOCH CHURCH ROAD

HORIZONTAL SCALE: 1" = 40' VERTICAL SCALE: 1" = 4'

DESIGN SPEED: 50 MPH - INTERSECTION SIGHT DISTANCE: 500 LF

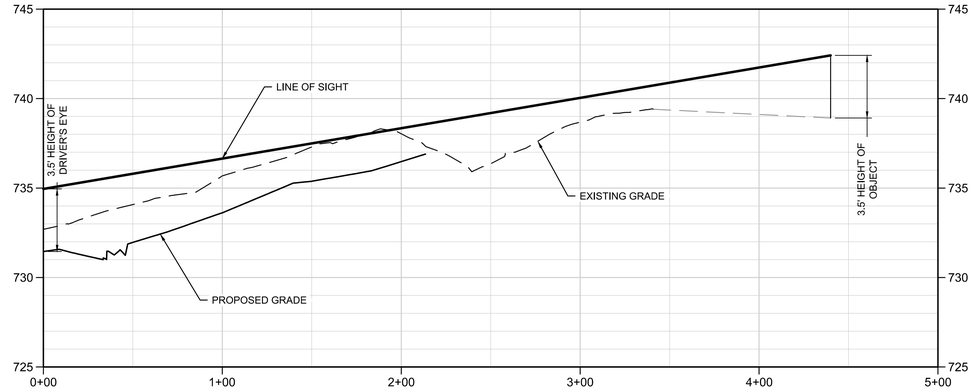

LEFT HORIZONTAL SIGHT DISTANCE - ANTIOCH CHURCH ROAD

HORIZONTAL SCALE: 1" = 40' VERTICAL SCALE: 1" = 4'

DESIGN SPEED: 50 MPH - INTERSECTION SIGHT DISTANCE: 440 LF (TO SIGNALIZED INTERSECTION)

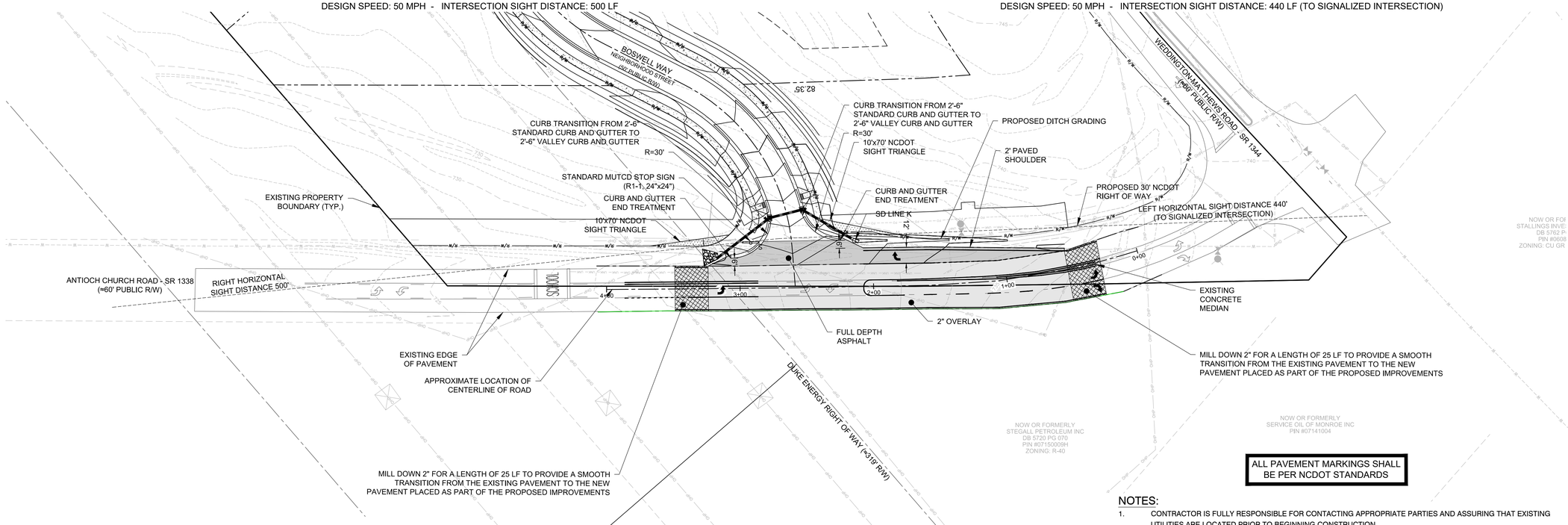

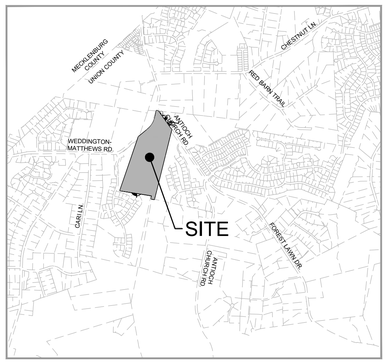

VICINITY MAP

SCALE: 1" = 2,000'

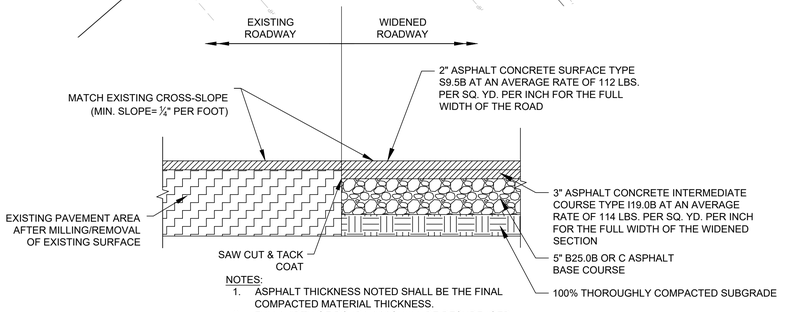

NOTES:

1. ASPHALT THICKNESS NOTED SHALL BE THE FINAL COMPACTED MATERIAL THICKNESS.
2. FULL WIDTH OF ROAD WAY SHALL BE RESURFACED PER NCDOT REQUIREMENTS.
3. SWEEP AND TACK COAT BETWEEN LAYERS.
4. ALL CURB AND GUTTER SHALL BE SET ON 5" ASPHALT BASE COURSE (B25.0B OR C)

PATCHING AND LEVELING MAY BE REQUIRED PRIOR TO RESURFACING OF THE ROADWAY

PAVEMENT WIDENING DETAIL/CROSS SECTION

SCALE: NTS

NOTES:

1. CONTRACTOR IS FULLY RESPONSIBLE FOR CONTACTING APPROPRIATE PARTIES AND ASSURING THAT EXISTING UTILITIES ARE LOCATED PRIOR TO BEGINNING CONSTRUCTION.
2. CONTRACTOR IS RESPONSIBLE FOR PLACING BARRICADES, USING FLAG MAN, ETC. AS NECESSARY TO ENSURE THE SAFETY OF THE PUBLIC.
3. ALL PAVEMENT CUTS, ASPHALT OR CONCRETE, ARE TO BE PLACED ACCORDING TO STANDARDS OF THE NORTH CAROLINA DEPARTMENT OF TRANSPORTATION, TOWN OF WEDDINGTON AND UNION COUNTY SPECIFICATIONS.
4. SHORING WILL BE ACCORDING TO OSHA TRENCHING STANDARDS, PART 1926, SUBPART P, OR AS AMENDED.
5. FOR ADDITIONAL GENERAL NOTES, SEE SHEET 8.0.
6. POSTED SPEED LIMIT ALONG ANTIOCH CHURCH ROAD IS 45 MPH.
7. LETTER OF PERMISSION AND/OR APPLICABLE EASEMENTS TO BE OBTAINED BY THE DEVELOPER FROM ANY AFFECTED PROPERTY OWNER IF GRADING ACTIVITIES NEED TO OCCUR OUTSIDE OF THE DELINEATED RIGHT-OF-WAY IN ORDER TO ACCOMMODATE PROPOSED ROADWAY IMPROVEMENTS.
8. ALL PAVEMENT MARKINGS SHALL BE PER NCDOT STANDARDS, 1205.05 AND 1205.08.
9. ALL FIXED OBJECTS THAT ARE NOT CONSIDERED BREAKAWAY MUST BE REMOVED FROM CLEAR RECOVER ZONE (18'-20' FROM EDGE OF FUTURE PAVEMENT)
10. OWNER IS RESPONSIBLE TO REMOVE EXISTING TREES LOCATED WITHIN SIGHT LINE. PERMISSION FROM ADJACENT PROPERTY OWNER IS REQUIRED PRIOR TO TREE REMOVAL FROM ADJACENT PROPERTY. IF TREES ARE ONLY TRIMMED AND NOT FULLY REMOVED AN EASEMENT WILL BE REQUIRED IN ORDER TO MAINTAIN CLEAR SIGHT DISTANCE.

GRAPHIC SCALE

40 0 20 40 80 160

(IN FEET)

1 inch = 40 ft.

PRELIMINARY DESIGN - NOT RELEASED FOR CONSTRUCTION, RECORDATION, CONVEYANCES, OR SALES

WK DICKSON
community infrastructure consultants

1320 MAIN STREET
SUITE 400
COLUMBIA, SC 29201
(t)803-786-4261
(f)803-786-4263

WWW.WKDICKSON.COM

NORTH CAROLINA PROFESSIONAL ENGINEER SEAL 033121 4/28/17 BRIAN E. THOMAS

PROFESSIONAL SEAL

REVISION RECORD

NO.	DATE	DESCRIPTION	BY
1	4/24/17	REVISED PER COMMENTS FROM NCDOT, TOWN OF WEDDINGTON, UCPW, & NCDEQ	JEB
2	6/6/17	REVISED PER COMMENTS FROM NCDOT, TOWN OF WEDDINGTON, UCPW, & NCDEQ	TAK
3	6/20/17	REVISED PER COMMENTS FROM TOWN OF WEDDINGTON	WGB
4	6/28/17	REVISED PER COMMENTS FROM NCDOT	TAK

PROJECT NAME:

GRAHAM ALLEN SUBDIVISION

TOWN OF WEDDINGTON, SANDY RIDGE TOWNSHIP, UNION COUNTY, NC

DRAWING TITLE:

ANTIOCH CHURCH ROAD IMPROVEMENT PLAN

PROJ. MGR.:	BET
DESIGN BY:	MDJ
DRAWN BY:	MDJ
PROJ. DATE:	OCT. 2016

DRAWING NUMBER:

10.0

WKD PROJ. NO.:

20160191.00.CL

North Carolina 811 www.nc811.org

FILENAME P:\Projects\Land Planning\20160191\00\CL - Graham Allen Subdivision Redesign\CIVIL\CAD\DWG\Sheets\10-10.0 ANTIOCH PLAN.dwg, TxtWpb, 6/30/2017 12:06:17 AM

COPYRIGHT © W.K. DICKSON & CO., INC. ALL RIGHTS RESERVED. REPRODUCTION OR USE OF THE CONTENTS OF THIS DOCUMENT, ADDITIONS OR DELETIONS TO THIS DOCUMENT, IN WHOLE OR IN PART, WITHOUT WRITTEN CONSENT OF W.K. DICKSON & CO., INC., IS PROHIBITED. ONLY COPIES FROM THE ORIGINAL OF THIS DOCUMENT, MARKED WITH AN ORIGINAL SIGNATURE AND SEAL SHALL BE CONSIDERED TO BE VALID, TRUE COPIES.

STATE OF NORTH CAROLINA
DEPT. OF TRANSPORTATION
DIVISION OF HIGHWAYS
RALEIGH, N.C.
1-12

ENGLISH STANDARD DRAWING FOR
TEMPORARY LANE CLOSURES
2-LANE, 2-WAY ROADWAY-1 LANE CLOSED

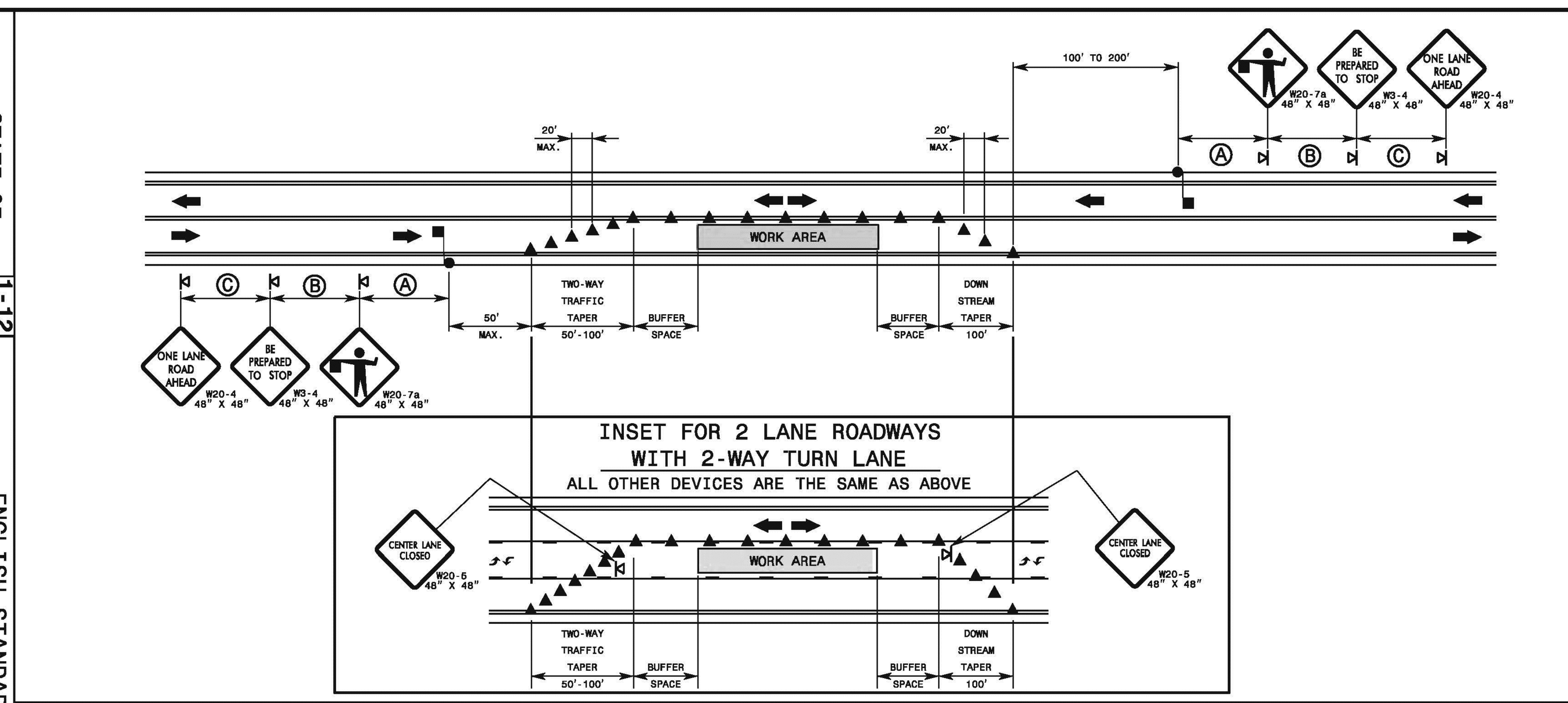

GENERAL NOTES FOR FLAGGER OPERATIONS

1- REFER TO STD. 1101.11 SHEET 4 FOR SIGN SPACING.
2- INSTALL LANE CLOSURES WITH THE TRAFFIC FLOW, BEGINNING WITH DEVICES ON THE UPSTREAM SIDE OF TRAFFIC.
3- REMOVE LANE CLOSURES AGAINST THE TRAFFIC FLOW, BEGINNING WITH DEVICES ON THE DOWNSTREAM SIDE OF TRAFFIC.
4- PLACE CONES THRU THE WORK AREA AT THE MAXIMUM SPACING EQUAL IN FEET TO 2 TIMES THE POSTED SPEED LIMIT.
5- EXTEND LANE CLOSURES AT THE BUFFER SPACE SUCH THAT STOPPING SIGHT DISTANCE IS PROVIDED TO THE FLAGGER (REFER TO STD. 1101.11 SHEET 2).
6- DO NOT STOP TRAFFIC IN ANY ONE DIRECTION FOR MORE THAN 5 MINUTES AT A TIME.
7- DRUMS OR SKINNY-DRUMS MAY BE USED IN LIEU OF CONES. REFER TO ROADWAY STANDARD DRAWING 1180.01 FOR SKINNY-DRUM REQUIREMENTS.
8- USE FLAGGERS TO CONTROL TRAFFIC AT INTERSECTIONS AFFECTED BY THE LANE CLOSURE. SUPPLEMENT FLAGGERS LOCATED AT INTERSECTIONS WITH FLAGGER AHEAD SIGNS (W20-7a) PLACED APPROXIMATELY 250 FT. IN ADVANCE OF THE FLAGGER. FOR SIGNALIZED INTERSECTIONS PLACE SIGNALS IN THE FLASH MODE AND RECOMMEND THE USE OF LAW ENFORCEMENT.
9- REFER TO 2009 MUTCD, CHAPTER 6, FOR FLAGGER CONTROL, REQUIREMENTS, AND PROCEDURES.
10- DO NOT EXCEED A 1 MILE LANE CLOSURE LENGTH UNLESS OTHERWISE SHOWN IN THE TMP OR AS DIRECTED BY THE ENGINEER.

GENERAL NOTES FOR PILOT CAR OPERATIONS

1- USE PILOT CARS WHEN DIRECTED BY THE ENGINEER.
2- IF ROADWAY WIDTH IS LESS THAN 22 FEET (EOP TO EOP), CONES MAY NOT BE REQUIRED ALONG WORK AREA, AND AT THE DISCRETION OF THE ENGINEER, CONES MAY BE OMITTED ALONG THE WORK AREA IF USING A PILOT CAR.
3- CONES ARE ALWAYS REQUIRED IN THE UPSTREAM AND DOWNSTREAM TAPERS.
4- MOUNT SIGN G20-4 "PILOT CAR FOLLOW ME" AT A CONSPICUOUS POSITION ON THE REAR OF THE PILOT VEHICLE.
5- DO NOT INSTALL MORE THAN ONE (1) MILE OF LANE CLOSURE, MEASURED FROM THE BEGINNING OF THE MERGE TAPER TO THE END OF THE LANE CLOSURE.
6- ADVISE RESIDENTS AND BUSINESSES WITHIN THE LANE CLOSURE LIMITS ABOUT METHODS OF SAFE EGRESS AND INGRESS FROM DRIVEWAYS DURING FLAGGING AND PILOT CAR OPERATIONS.

LEGEND
FLAGGER
CONE
PORTABLE SIGN
DIRECTION OF TRAFFIC FLOW

SHEET 1 OF 15
1101.02

STATE OF NORTH CAROLINA
DEPT. OF TRANSPORTATION
DIVISION OF HIGHWAYS
RALEIGH, N.C.
1-12

ENGLISH STANDARD DRAWING FOR
WORK ZONE ADVANCE WARNING SIGNS FOR FACILITIES ≤ 55 MPH

DETAIL A

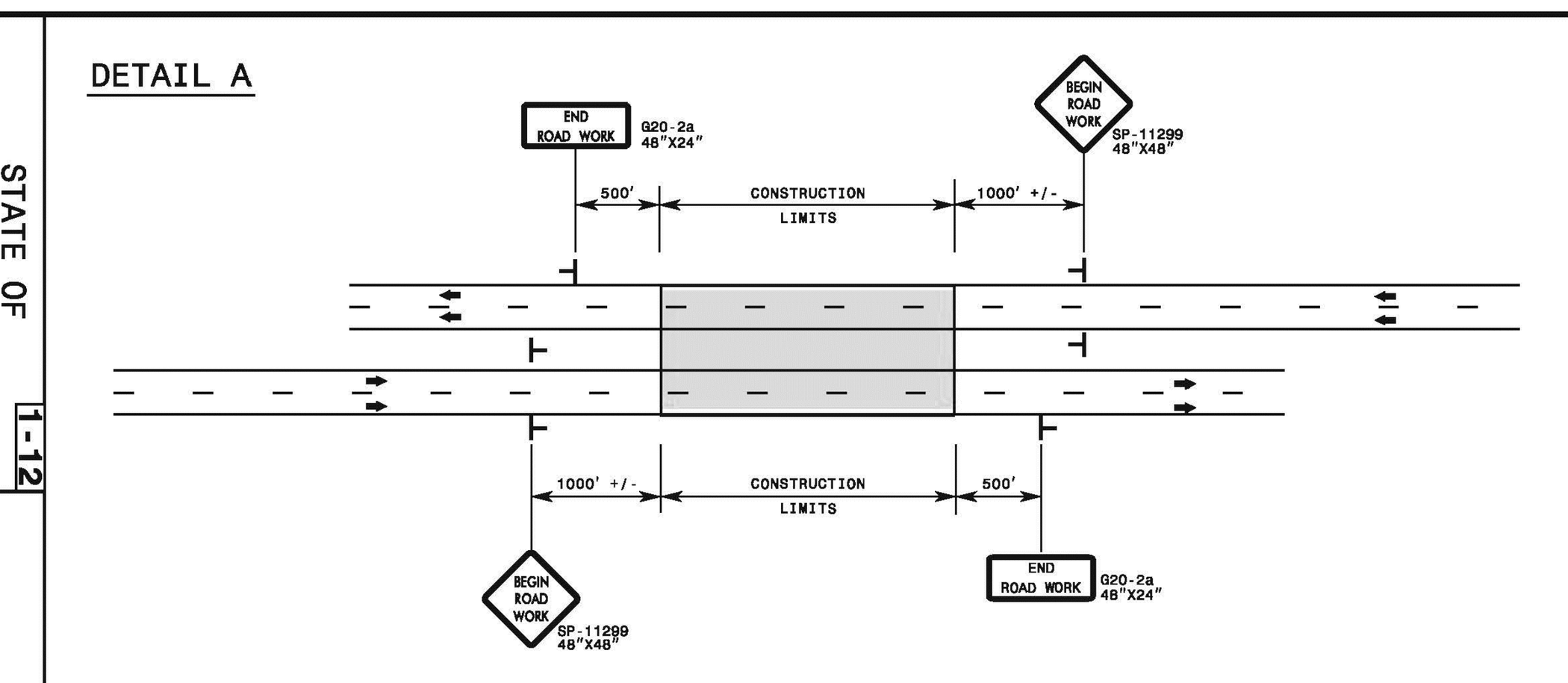

GENERAL NOTES

1- USE FLUORESCENT ORANGE SHEETING (TYPE VII OR HIGHER) ON ALL ADVANCED WORK ZONE SIGNS.
2- DO NOT INSTALL ADVANCE WARNING SIGNS MORE THAN 3 DAYS PRIOR TO BEGINNING OF WORK UNLESS COVERED.
3- SIGNS SHOWN ARE REQUIRED FOR WORK ZONES THAT WILL REMAIN IN EFFECT OVERNIGHT. FOR SHORT-TERM DAILY MAINTENANCE TYPE OPERATIONS, THIS SIGNING APPLICATION IS OPTIONAL; MAY USE ONLY APPLICABLE ROADWAY STANDARD DRAWINGS INSTEAD. HOWEVER, IF THIS SIGNING APPLICATION IS USED, SIGNS MAY BE PORTABLE MOUNTED.
4- ALL SIGN SPACING DIMENSIONS ARE APPROXIMATE, FIELD ADJUST AS NECESSARY OR AS DIRECTED.
5- USE 3LB STEEL U-CHANNEL POST OR 4" X 4" WOOD POST FOR ALL WORK ZONE SIGNS. 3LB STEEL U-CHANNEL POSTS MUST MEET THE REQUIREMENTS OF STANDARD SPECIFICATION SECTION 1094-1(B), MAY BE GALVANIZED STEEL, OR MAY BE PAINTED GREEN BY THE POST MANUFACTURER. SQUARE STEEL TUBING POSTS HAVING EQUIVALENT STRENGTH OF THE 3 LB STEEL U-CHANNEL POST ARE ALSO ACCEPTABLE FOR USE. ERECT SIGNS PER ROADWAY STANDARD DRAWING 1110.01. PAYMENT FOR WOOD POSTS, 3LB STEEL U-CHANNEL AND SQUARE STEEL TUBING POSTS WITH SIGNS WILL BE MADE ACCORDING TO STANDARD SPECIFICATION "WORK ZONE SIGNS" SECTION 1110.
6- WHEN NECESSARY, USE SPLICING IN ACCORDANCE WITH ROADWAY STANDARD DRAWING NO. 1110.01.
7- DO NOT BACK BRACE SIGN SUPPORTS.
8- TWO-WAY UNDIVIDED ADVANCE WARNING SIGN CONFIGURATION MAY BE USED ON URBAN MULTI-LANE FACILITIES WHERE CONDITIONS LIMIT THE USE OF DUAL MOUNTED SIGNS AS DETERMINED BY THE ENGINEER.

LEGEND
STATIONARY SIGN
DIRECTION OF TRAFFIC FLOW

DETAIL B

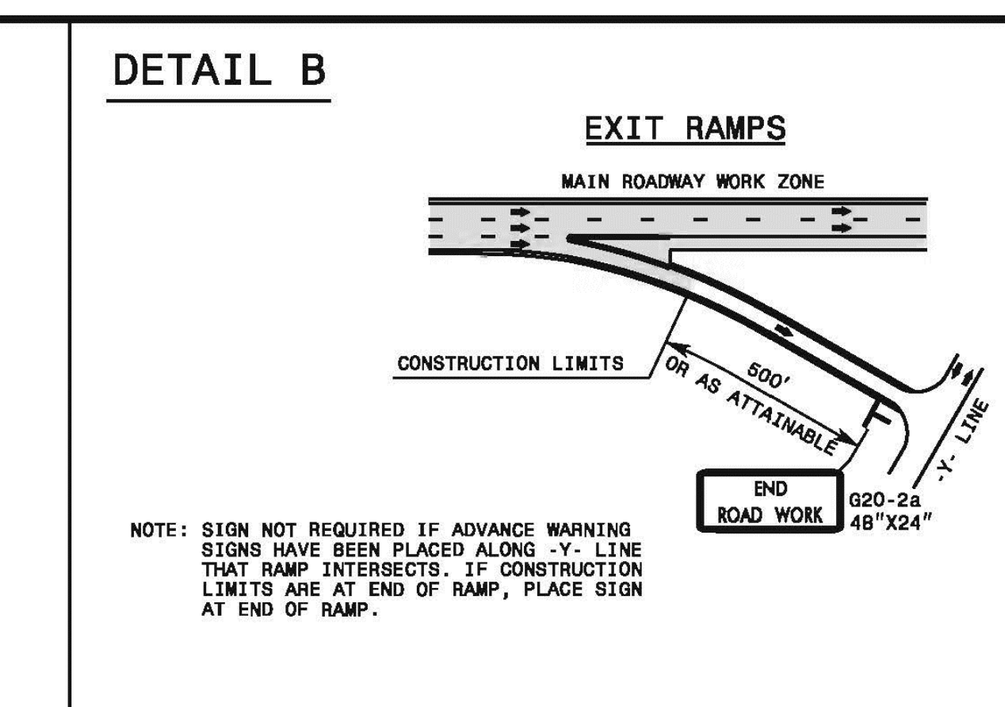

DETAIL C

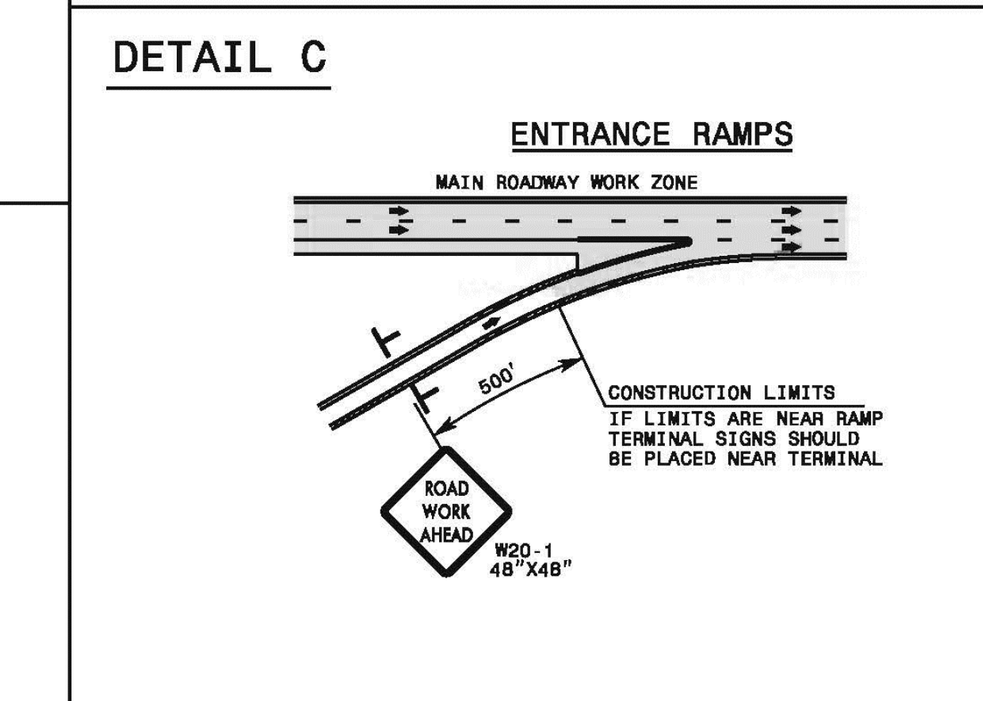

DETAIL D

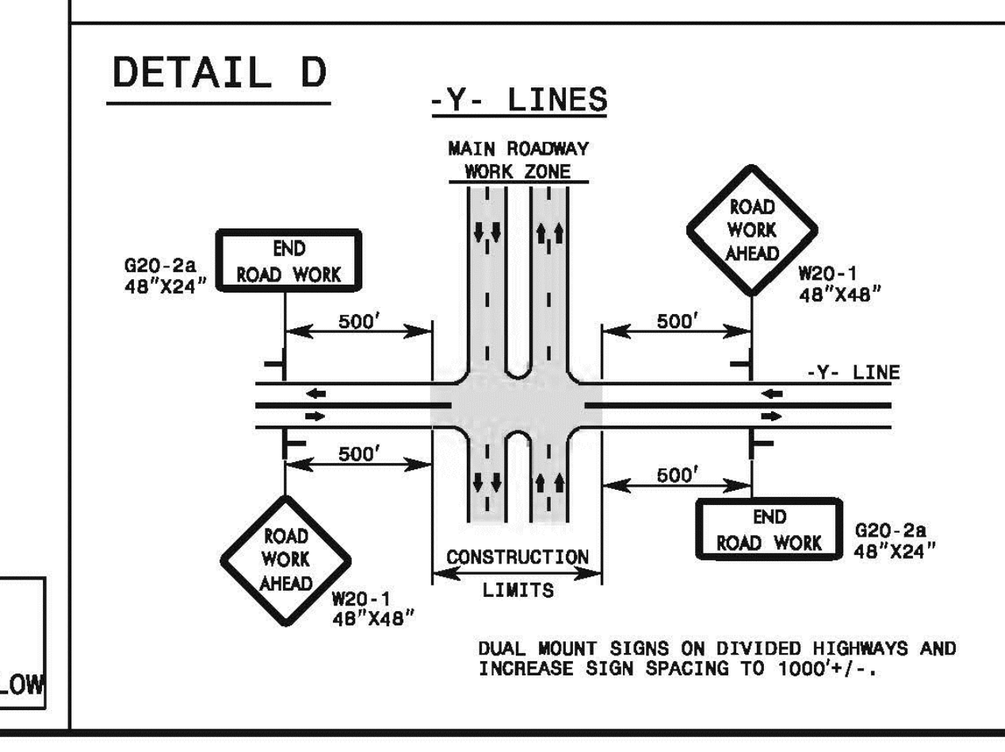

SHEET 2 OF 3
1101.01

STATE OF NORTH CAROLINA
DEPT. OF TRANSPORTATION
DIVISION OF HIGHWAYS
RALEIGH, N.C.
1-12

ENGLISH STANDARD DRAWING FOR
TEMPORARY SHOULDER CLOSURES

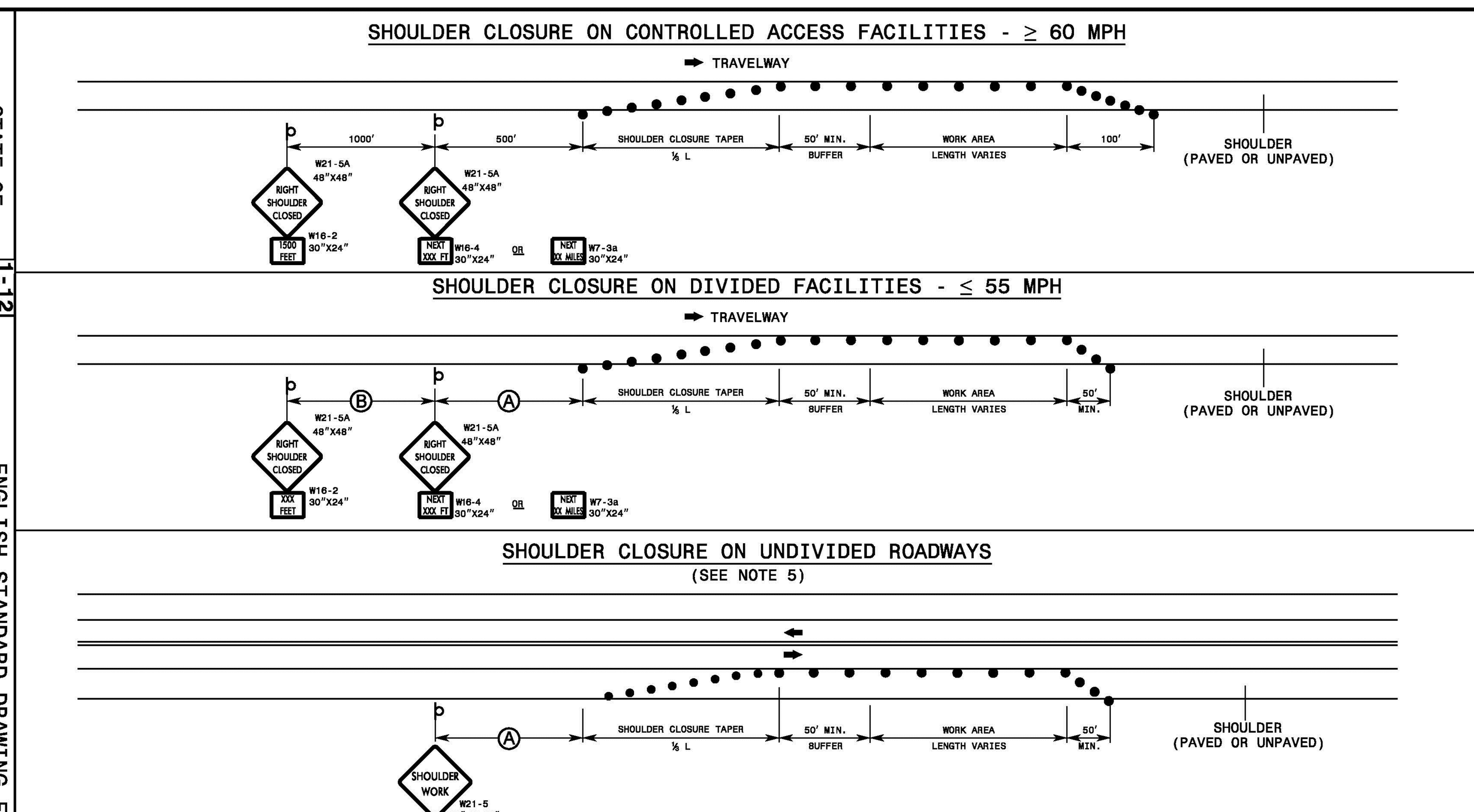

GENERAL NOTES

1- PLACE SHOULDER CLOSURE SIGNS ON THE SAME SIDE AS THE SHOULDER THAT IS CLOSED.
2- PLACE DRUMS IN THE SHOULDER TAPER AT THE MAXIMUM SPACING EQUAL IN FEET TO THE POSTED SPEED LIMIT. THE MAXIMUM SPACING OF DRUMS ALONG THE WORK AREA IS EQUAL IN FEET TO 2 TIMES THE POSTED SPEED LIMIT.
3- USE STATIONARY SIGNS FOR LONG TERM OPERATIONS (LONGER THAN 3 DAYS).
4- REFER TO STD. 1101.11 FOR "L" DISTANCE AND SIGN SPACING.
5- THE TWO-LANE, TWO-WAY DRAWING MAY BE APPLIED TO UNDIVIDED, MULTI-LANE FACILITIES.

LEGEND
DRUM
STATIONARY OR PORTABLE SIGN
DIRECTION OF TRAFFIC FLOW

SHEET 1 OF 1
1101.04

TRAFFIC CONTROL NOTES:

1.0 BEGINNING OF WORK AND STREET CLOSINGS:

THE CONTRACTOR IS RESPONSIBLE FOR NOTIFYING THE NCDOT OF ANY WORK WHERE THE NUMBER OF TRAVEL LANES IS REDUCED FROM NORMAL CONDITIONS.

THE CONTRACTOR SHALL INSTALL THE PROJECT ADVANCED WARNING SIGNS. THESE SIGNS SHALL BE IN PLACE FOR ONE WEEK BEFORE CONSTRUCTION ACTIVITY BEGINS. THE SIGNS ARE TO REMAIN COVERED UNTIL ROAD CONSTRUCTION BEGINS. THE CONTRACTOR SHALL COMMENCE WITH THE PROPOSED ROADWAY IMPROVEMENTS FOR THE AFFECTED ROAD ON THE DATE SCHEDULED FOR THE CLOSING OF THE TRAVEL LANE.

2.0 RIGHT OF WAY USE PERMIT:

THE CONTRACTOR WILL BE RESPONSIBLE FOR OBTAINING THE APPLICABLE RIGHT-OF-WAY PERMITS FROM NCDOT FOR APPROVAL TO WORK IN THE STREET RIGHT-OF-WAY(S) OF NORTH CAROLINA.

3.0 TRAFFIC CONTROL PLAN:

TRAFFIC CONTROL WILL BE PERFORMED BY THE CONTRACTOR BASED UPON THE TRAFFIC CONTROL SPECIAL PROVISIONS. THE TRAFFIC CONTROL SPECIAL PROVISIONS MAY REFER TO PLAN SHEETS FOR MAJOR WORK ITEMS OR DETAILS FROM NCDOT.

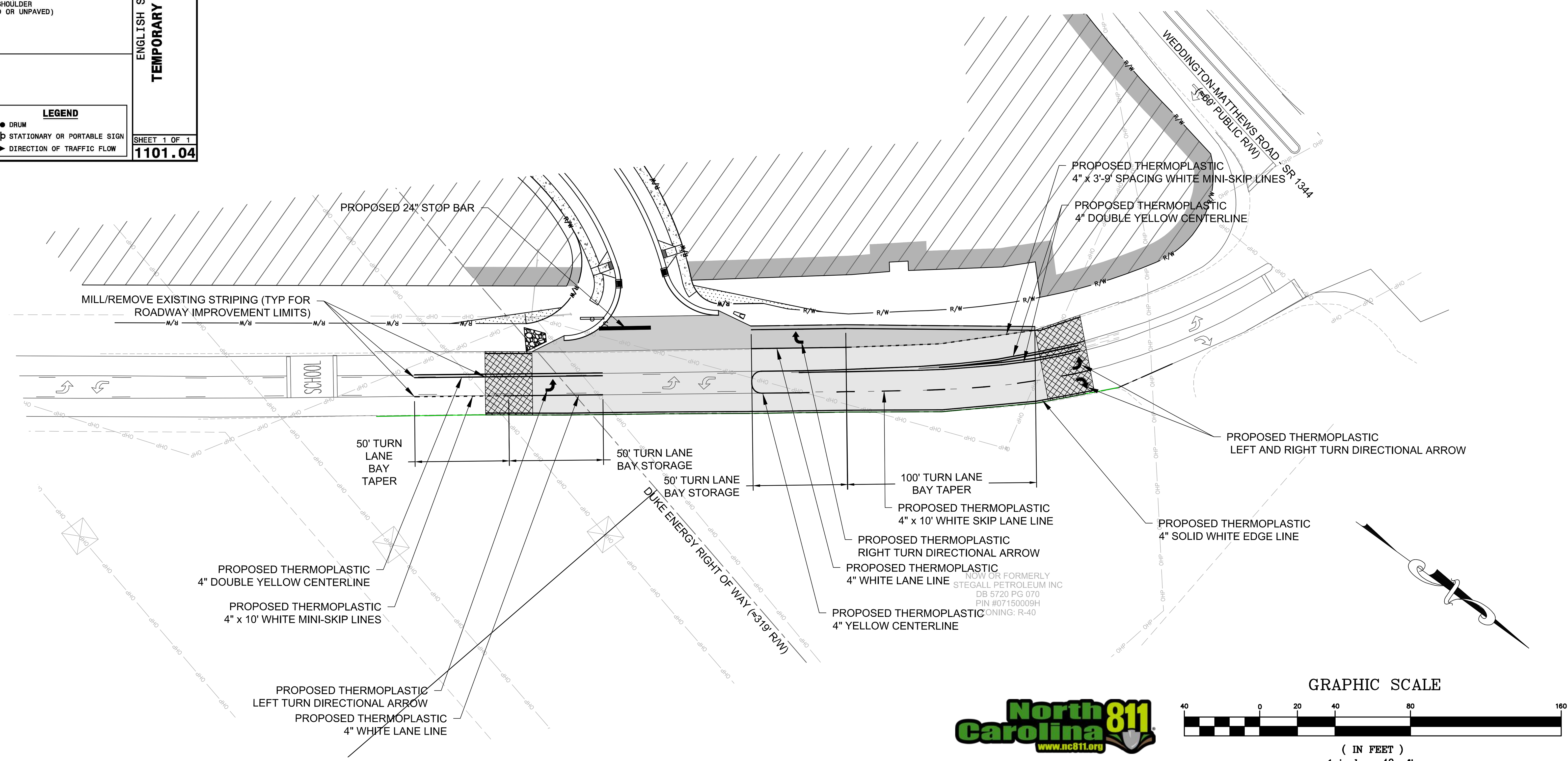

GRAPHIC SCALE
40 0 20 40 80 160
(IN FEET)
1 inch = 40 ft.

PRELIMINARY DESIGN - NOT RELEASED FOR CONSTRUCTION, RECORDATION, CONVEYANCES, OR SALES

WK DICKSON
community infrastructure consultants
1320 MAIN STREET
SUITE 400
COLUMBIA, SC 29201
(t)803-786-4261
(f)803-786-4263
WWW.WKDICKSON.COM

NORTH CAROLINA PROFESSIONAL ENGINEER SEAL 033121 BRIAN E. THOMAS 6/28/17
PROFESSIONAL SEAL

REVISION RECORD

NO.	DATE	DESCRIPTION	BY
1.	4/24/17	REVISED PER COMMENTS FROM NCDOT, TOWN OF WEDDINGTON, UCPW, & NCDEQ	JEB
2.	6/6/17	REVISED PER COMMENTS FROM NCDOT, TOWN OF WEDDINGTON, UCPW, & NCDEQ	TAK
3.	6/20/17	REVISED PER COMMENTS FROM TOWN OF WEDDINGTON	WGB
4.	6/28/17	REVISED PER COMMENTS FROM NCDOT	TAK

PROJECT NAME:
GRAHAM ALLEN SUBDIVISION
TOWN OF WEDDINGTON, SANDY RIDGE TOWNSHIP, UNION COUNTY, NC

DRAWING TITLE:
TRAFFIC CONTROL AND ANTIOCH CHURCH ROAD STRIPPING PLAN

PROJ. MGR.:	BET
DESIGN BY:	MDJ
DRAWN BY:	MDJ
PROJ. DATE:	OCT. 2016

DRAWING NUMBER:
10.1

WKD PROJ. NO.:
20160191.00.CL

WK DICKSON
community infrastructure consultants

FILE PATH:M:\Projects\Sunbelt Holding SE I\20160191\00CL - Graham Allen Subdivision Redesign CD's\CADD\DWG\Sheets\10.0-10.4 NCDOT PLAN.dwg, TKARSKI, 6/29/2017 10:36:25 AM

COPYRIGHT © W.K. DICKSON & CO., INC. ALL RIGHTS RESERVED. REPRODUCTION OR USE OF THE CONTENT OF THIS DOCUMENT, ADDITIONS OR MODIFICATIONS TO THE CONTENT OF THIS DOCUMENT, OR ANY PART THEREOF, BY ANY METHOD, ELECTRONIC OR OTHERWISE, WITHOUT THE PRIOR WRITTEN CONSENT OF W.K. DICKSON & CO., INC. IS STRICTLY PROHIBITED. ANY UNAUTHORIZED REPRODUCTION, ADDITION OR MODIFICATION TO THIS DOCUMENT, OR ANY PART THEREOF, WITHOUT THE PRIOR WRITTEN CONSENT OF W.K. DICKSON & CO., INC. SHALL BE CONSIDERED TO BE NULL. THE CONTENT OF THIS DOCUMENT SHALL NOT BE CONSIDERED TO BE VALID UNLESS IT CONTAINS THE ORIGINAL SIGNATURE AND SEAL OF THE PROFESSIONAL WHO PREPARED IT. ANY COPY OF THIS DOCUMENT MARKED WITH AN ORIGINAL SIGNATURE AND SEAL SHALL BE CONSIDERED TO BE NULL. TRUE COPIES RESULTING FROM THE ORIGINAL OF THIS DOCUMENT MARKED WITH AN ORIGINAL SIGNATURE AND SEAL SHALL BE CONSIDERED TO BE NULL. TRUE COPIES RESULTING FROM THE ORIGINAL OF THIS DOCUMENT MARKED WITH AN ORIGINAL SIGNATURE AND SEAL SHALL BE CONSIDERED TO BE NULL. TRUE COPIES

STATION: 1+50
SCALE: 1" = 5' HORIZONTAL
1" = 5' VERTICAL

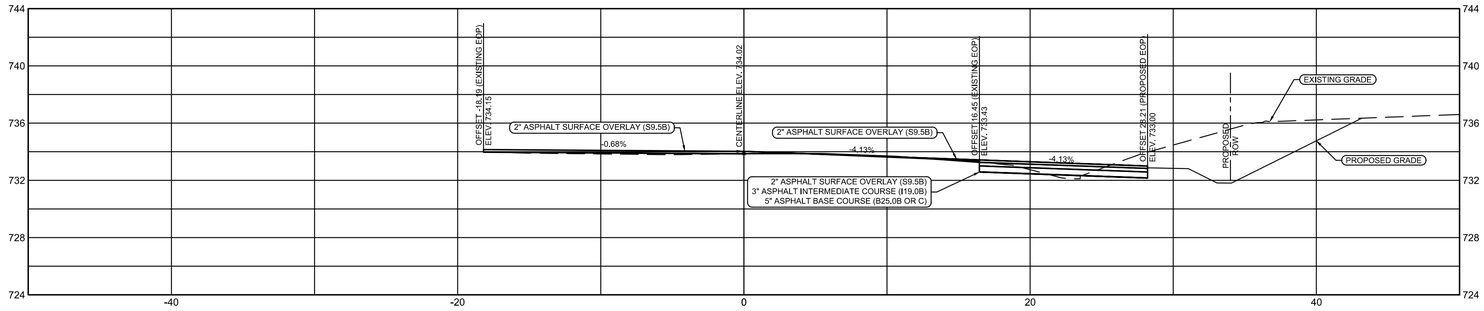

STATION: 1+00
SCALE: 1" = 5' HORIZONTAL
1" = 5' VERTICAL

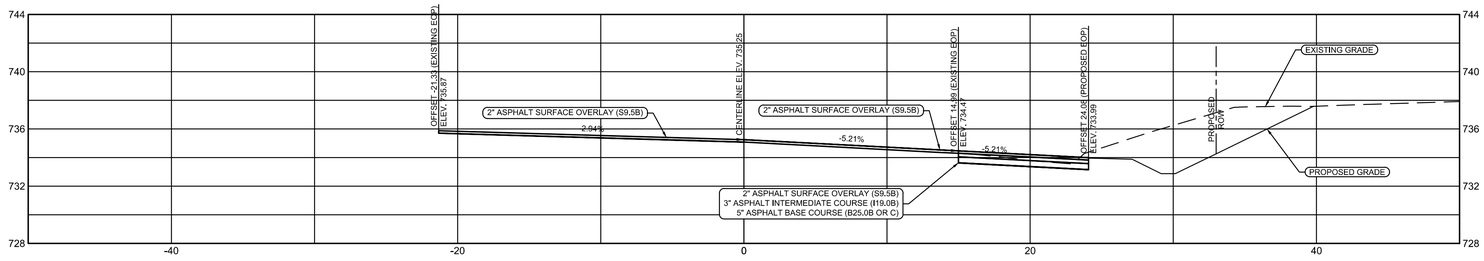

STATION: 0+50
SCALE: 1" = 5' HORIZONTAL
1" = 5' VERTICAL

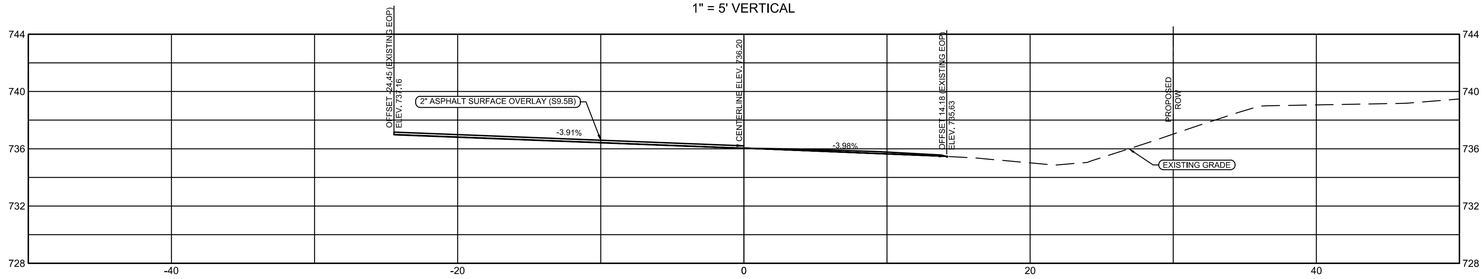

STATION: 0+00
SCALE: 1" = 5' HORIZONTAL
1" = 5' VERTICAL

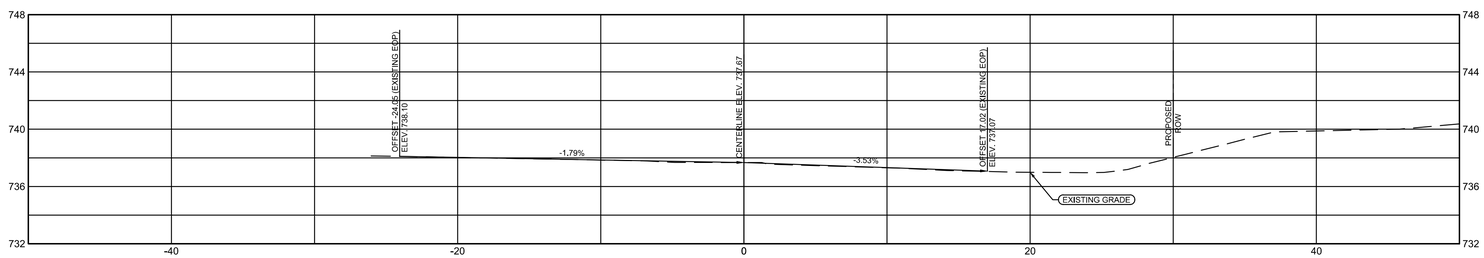

GRAPHIC SCALE

5 0 2.5 5 10 20

(IN FEET)
1 inch = 5 ft.

PRELIMINARY DESIGN - NOT RELEASED FOR CONSTRUCTION, RECORDATION, CONVEYANCES, OR SALES

WK DICKSON
community infrastructure consultants

1320 MAIN STREET
SUITE 400
COLUMBIA, SC 29201
(t)803-786-4261
(f)803-786-4263

WWW.WKDICKSON.COM

NORTH CAROLINA PROFESSIONAL ENGINEER BRIAN E. THOMAS 033121 6/28/17

PROFESSIONAL SEAL

REVISION RECORD

NO.	DATE	BY	DESCRIPTION
1.	4/24/17	JEB	REVISED PER COMMENTS FROM NCDOT, TOWN OF WEDDINGTON, UCPW, & NCDEQ
2.	6/6/17	TAK	REVISED PER COMMENTS FROM NCDOT, TOWN OF WEDDINGTON, UCPW, & NCDEQ
3.	6/20/17	WGB	REVISED PER COMMENTS FROM TOWN OF WEDDINGTON
4.	6/28/17	TAK	REVISED PER COMMENTS FROM NCDOT

PROJECT NAME:
GRAHAM ALLEN SUBDIVISION
TOWN OF WEDDINGTON, SANDY RIDGE TOWNSHIP, UNION COUNTY, NC

DRAWING TITLE:
ANTIOCH CHURCH ROAD CROSS SECTIONS

PROJ. MGR.:	BET
DESIGN BY:	MDJ
DRAWN BY:	MDJ
PROJ. DATE:	OCT. 2016

DRAWING NUMBER:
10.2

WKD PROJ. NO.:
20160191.00.CL

COPYRIGHT © W.K. DICKSON & CO., INC. ALL RIGHTS RESERVED. REPRODUCTION OR USE OF THE CONTENT OF THIS DOCUMENT, ADDITIONS OR DELETIONS TO THE CONTENT OF THIS DOCUMENT, OR ANY PART THEREOF, BY ANY METHOD, ELECTRONIC OR OTHERWISE, WITHOUT THE PRIOR WRITTEN CONSENT OF W.K. DICKSON & CO., INC. IS STRICTLY PROHIBITED. ANY UNAUTHORIZED REPRODUCTION, ADDITION OR DELETION TO THIS DOCUMENT SHALL BE CONSIDERED TO BE NULL AND VOID. © W.K. DICKSON & CO., INC.

STATION: 4+00
SCALE: 1" = 5' HORIZONTAL
1" = 5' VERTICAL

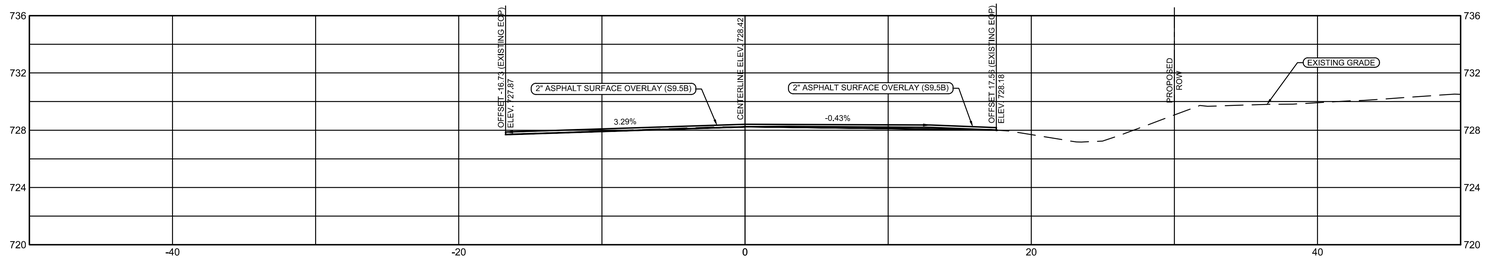

STATION: 3+50
SCALE: 1" = 5' HORIZONTAL
1" = 5' VERTICAL

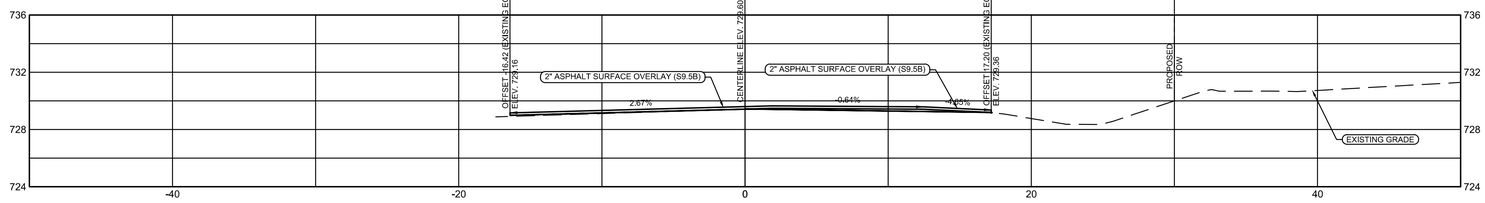

STATION: 3+00
SCALE: 1" = 5' HORIZONTAL
1" = 5' VERTICAL

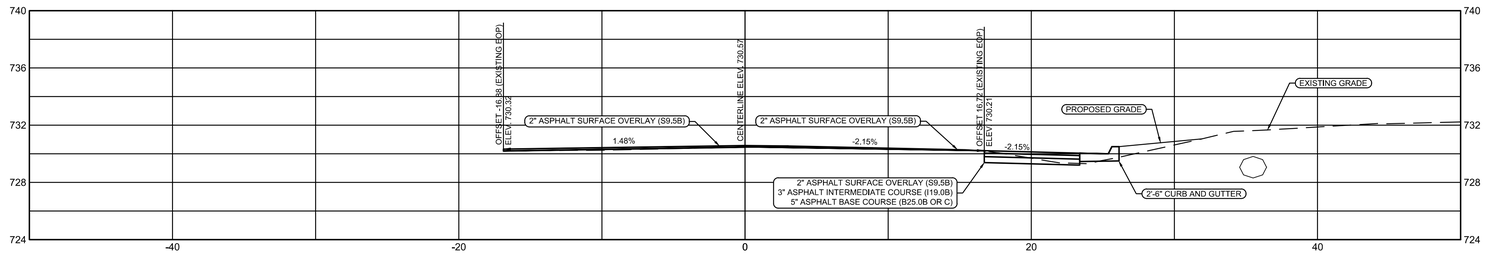

STATION: 2+50
SCALE: 1" = 5' HORIZONTAL
1" = 5' VERTICAL

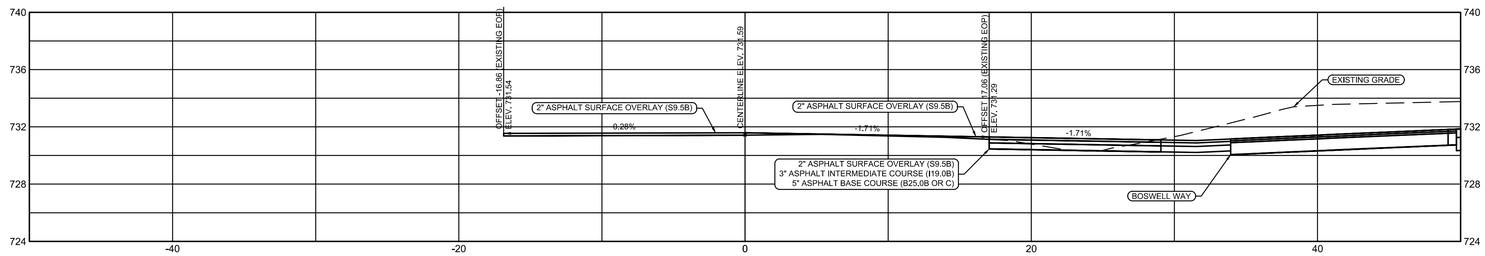

STATION: 2+00
SCALE: 1" = 5' HORIZONTAL
1" = 5' VERTICAL

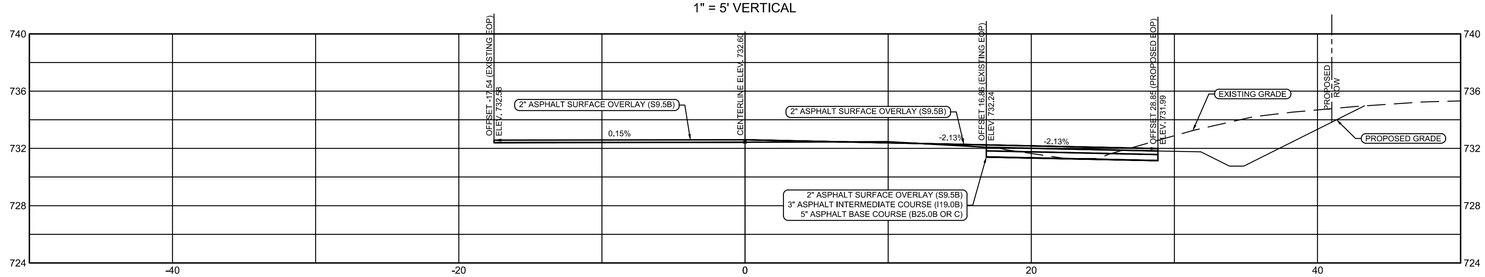

GRAPHIC SCALE

5 0 2.5 5 10 20

(IN FEET)
1 inch = 5 ft.

PRELIMINARY DESIGN - NOT RELEASED FOR CONSTRUCTION, RECORDATION, CONVEYANCES, OR SALES

WK DICKSON
community infrastructure consultants

1320 MAIN STREET
SUITE 400
COLUMBIA, SC 29201
(t)803-786-4261
(f)803-786-4263

WWW.WKDICKSON.COM

NORTH CAROLINA PROFESSIONAL ENGINEER BRIAN E. THOMAS 033121 4/28/17

PROFESSIONAL SEAL

REVISION RECORD

NO.	DATE	DESCRIPTION	BY
1.	4/24/17	REVISED PER COMMENTS FROM NCDOT, TOWN OF WEDDINGTON, UCPW, & NCDEQ	JEB
2.	6/6/17	REVISED PER COMMENTS FROM NCDOT, TOWN OF WEDDINGTON, UCPW, & NCDEQ	TAK
3.	6/20/17	REVISED PER COMMENTS FROM TOWN OF WEDDINGTON	WGB
4.	6/28/17	REVISED PER COMMENTS FROM NCDOT	TAK

PROJECT NAME:
GRAHAM ALLEN SUBDIVISION
TOWN OF WEDDINGTON, SANDY RIDGE TOWNSHIP, UNION COUNTY, NC

DRAWING TITLE:
ANTIOCH CHURCH ROAD CROSS SECTIONS

PROJ. MGR.:	BET
DESIGN BY:	MDJ
DRAWN BY:	MDJ
PROJ. DATE:	OCT. 2016

DRAWING NUMBER:
10.3

WKD PROJ. NO.:
20160191.00.CL

C:\LT\ATM\LP Projects\Current Hosting SP (2016)\160191\DOCS - Graham Allen Subdivision Redesign (Chr\ZADS\ZADS\Sheets\10-3-11 NZ2017 FLAT.dwg, TXARIAL 6/28/2017 11:57:39 AM

WK DICKSON
community infrastructure consultants

COPYRIGHT © W.K. DICKSON & CO., INC. ALL RIGHTS RESERVED. REPRODUCTION OR USE OF THE CONTENTS OF THIS DRAWING, ADVTXOR OR ELECTRONIC FORM WITHOUT THE EXPRESS WRITTEN PERMISSION OF W.K. DICKSON & CO., INC. IS PROHIBITED. ANY UNAUTHORIZED REUSE OF THE DRAWING FOR ANY PURPOSE OTHER THAN THE ORIGINAL INTENT OF THIS DOCUMENT SHALL BE WITHOUT LIABILITY TO W.K. DICKSON & CO., INC. AND ANY UNAUTHORIZED REUSE SHALL BE AT THE USER'S SOLE RISK AND WITHOUT LIABILITY OR LEGAL EXPOSURE TO W.K. DICKSON & CO., INC. ANY AND ALL CLAIMS, DAMAGES, LOSSES, AND EXPENSES ARISING OR RESULTING FROM SUCH UNAUTHORIZED REUSE SHALL BE BORNE BY THE USER. ALL REPRODUCTIONS OF THIS DOCUMENT (UNLESS OTHERWISE AUTHORIZED IN WRITING BY W.K. DICKSON & CO., INC.) SHALL BE CONSIDERED TO BE NULL AND VOID. THE ORIGINAL OF THIS DOCUMENT MARKED WITH AN ORIGINAL SIGNATURE AND SEAL SHALL BE CONSIDERED TO BE THE ONLY VALID VERSION.

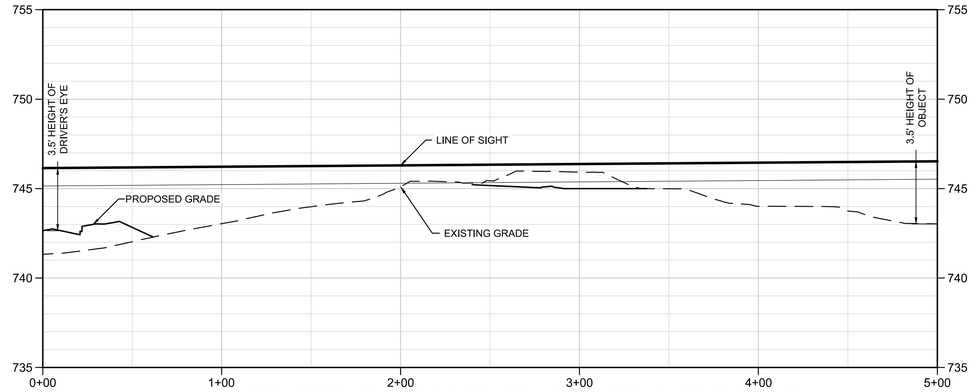

LEFT HORIZONTAL SIGHT DISTANCE - WEDDINGTON MATTHEWS ROAD

HORIZONTAL SCALE: 1" = 40' VERTICAL SCALE: 1" = 4'

DESIGN SPEED: 50 MPH - INTERSECTION SIGHT DISTANCE: 500 LF

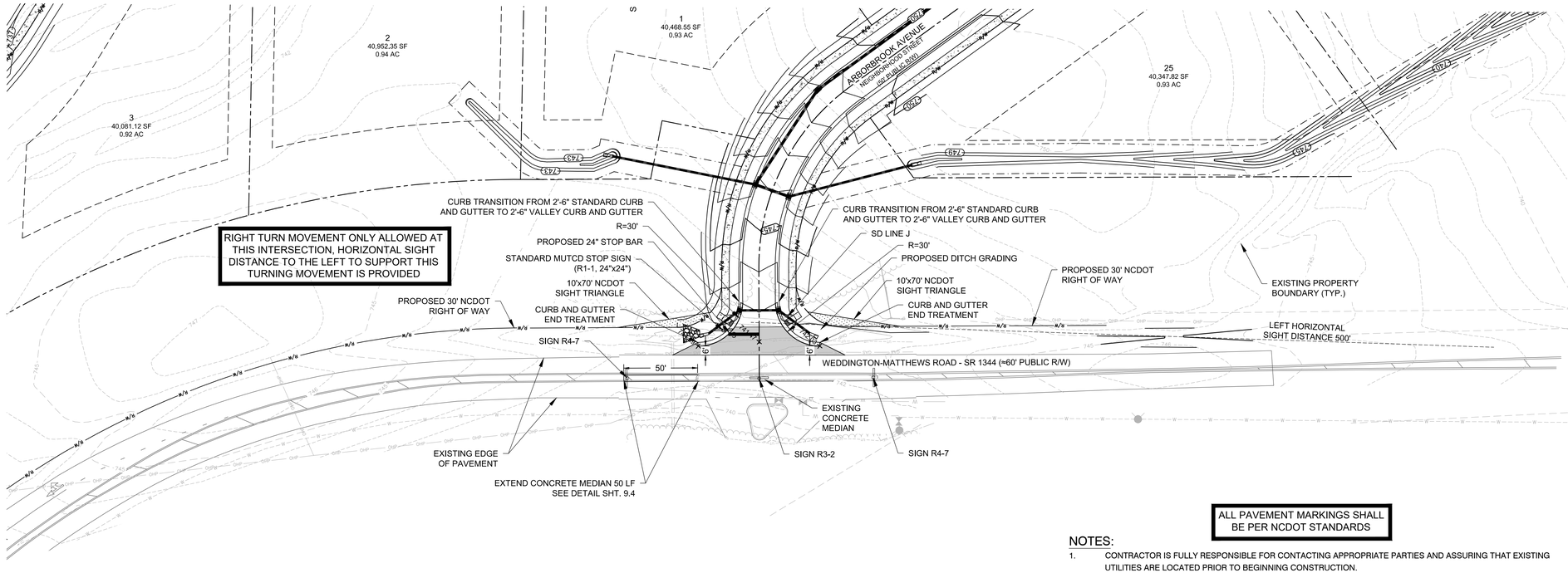

ALL PAVEMENT MARKINGS SHALL BE PER NCDOT STANDARDS

NOTES:

1. CONTRACTOR IS FULLY RESPONSIBLE FOR CONTACTING APPROPRIATE PARTIES AND ASSURING THAT EXISTING UTILITIES ARE LOCATED PRIOR TO BEGINNING CONSTRUCTION.
2. CONTRACTOR IS RESPONSIBLE FOR PLACING BARRICADES, USING FLAG MAN, ETC. AS NECESSARY TO ENSURE THE SAFETY OF THE PUBLIC.
3. ALL PAVEMENT CUTS, ASPHALT OR CONCRETE, ARE TO BE PLACED ACCORDING TO STANDARDS OF THE NORTH CAROLINA DEPARTMENT OF TRANSPORTATION, TOWN OF WEDDINGTON AND UNION COUNTY SPECIFICATIONS.
4. SHORING WILL BE ACCORDING TO OSHA TRENCHING STANDARDS, PART 1926, SUBPART P, OR AS AMENDED.
5. FOR ADDITIONAL GENERAL NOTES, SEE SHEET 8.0.
6. POSTED SPEED LIMIT ALONG WEDDINGTON MATTHEWS ROAD IS 45 MPH.
7. LETTER OF PERMISSION AND/OR APPLICABLE EASEMENTS TO BE OBTAINED BY THE DEVELOPER FROM ANY AFFECTED PROPERTY OWNER IF GRADING ACTIVITIES NEED TO OCCUR OUTSIDE OF THE DELINEATED RIGHT-OF-WAY IN ORDER TO ACCOMMODATE PROPOSED ROADWAY IMPROVEMENTS.
8. ALL PAVEMENT MARKINGS SHALL BE PER NCDOT STANDARDS, 1205.05 AND 1205.08.
9. ALL FIXED OBJECTS THAT ARE NOT CONSIDERED BREAKAWAY MUST BE REMOVED FROM CLEAR RECOVER ZONE (18'-20' FROM EDGE OF FUTURE PAVEMENT)
10. OWNER IS RESPONSIBLE TO REMOVE EXISTING TREES LOCATED WITHIN SIGHT LINE. PERMISSION FROM ADJACENT PROPERTY OWNER IS REQUIRED PRIOR TO TREE REMOVAL FROM ADJACENT PROPERTY. IF TREES ARE ONLY TRIMMED AND NOT FULLY REMOVED AN EASEMENT WILL BE REQUIRED IN ORDER TO MAINTAIN CLEAR SIGHT DISTANCE.

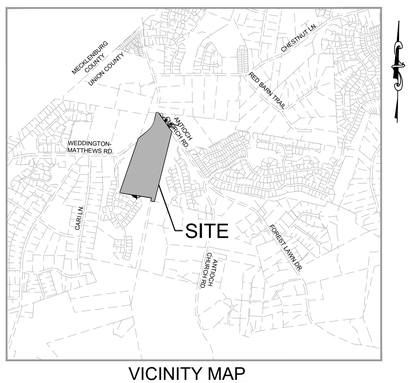

VICINITY MAP

SCALE: 1" = 2,000'

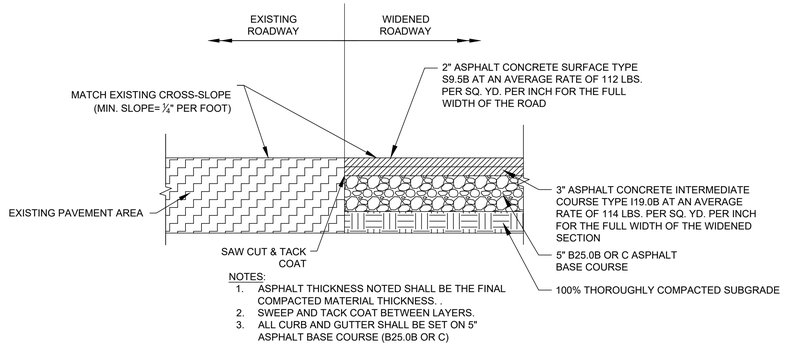

NOTES:

1. ASPHALT THICKNESS NOTED SHALL BE THE FINAL COMPACTED MATERIAL THICKNESS. .
2. SWEEP AND TACK COAT BETWEEN LAYERS.
3. ALL CURB AND GUTTER SHALL BE SET ON 5" ASPHALT BASE COURSE (B25.0B OR C)

PAVEMENT WIDENING DETAIL/CROSS SECTION

SCALE: NTS

GRAPHIC SCALE

40 0 20 40 80 160

(IN FEET)

1 inch = 40 ft.

WK DICKSON
community infrastructure consultants

1320 MAIN STREET
SUITE 400
COLUMBIA, SC 29201
(t)803-786-4261
(f)803-786-4263

WWW.WKDICKSON.COM

NORTH CAROLINA PROFESSIONAL ENGINEER SEAL 033121 BRIAN E. THOMAS

PROFESSIONAL SEAL

PRELIMINARY DESIGN - NOT RELEASED FOR CONSTRUCTION, RECORDATION, CONVEYANCES, OR SALES

REVISION RECORD

NO.	DATE	DESCRIPTION	BY
1.	4/24/17	REVISED PER COMMENTS FROM NCDOT, TOWN OF WEDDINGTON, UCPW, & NCDEQ	JEB
2.	6/6/17	REVISED PER COMMENTS FROM NCDOT, TOWN OF WEDDINGTON, UCPW, & NCDEQ	TAK
3.	6/20/17	REVISED PER COMMENTS FROM TOWN OF WEDDINGTON	WGB
4.	6/28/17	REVISED PER COMMENTS FROM NCDOT	TAK

PROJECT NAME:
GRAHAM ALLEN SUBDIVISION
TOWN OF WEDDINGTON, SANDY RIDGE TOWNSHIP, UNION COUNTY, NC

DRAWING TITLE:
WEDDINGTON MATTHEWS ROAD ENTRANCE PLAN

PROJ. MGR.:	BET
DESIGN BY:	MDJ
DRAWN BY:	MDJ
PROJ. DATE:	OCT. 2016

DRAWING NUMBER:
10.4

WKD PROJ. NO.:
20160191.00.CL

North Carolina 811 www.nc811.org

WK DICKSON
community infrastructure consultants

R:\ENTM Projects\Current Projects\20160191XXCL - Graham Allen Subdivision Redesign Ctm\CADD\Civil3D\Drawings\10.4 14 NCDOT PLAN.dwg, TAK004, 6/28/2017 11:08:34 AM

Land Use Plan Annual Review - July 2017

The Town continues to support the goals and policies of the land use plan. Below is a list of items reviewed by the Planning Board over the past year and how they continue comply with the plan:

- Sketch Plans - Weddington Matthews Rd Subdivision and Deal Road Subdivision.

  Both plans protect scenic views with a 100' viewshed buffers along the thoroughfares and 50% open space to conserve wetlands, floodplain, and other environmentally sensitive lands. Both plans required public involvement meetings to solicit participation and input. All new development is proposed as single family homes.

- Preliminary Plats/Construction plans - Carringdon Subdivision, Threshold Church and Weddington Pond Subdivision.

  Through this process natural resources are preserved and adjacent properties are protected. Restrictions were placed for grading and clearing, protecting floodplain, waterways and erosion control. Drainage areas, soils and impervious surface were all factored in as part of the stormwater calculations to protect downstream properties from off-site run-off. The plan review considered the Town's roadway standards and included appropriate turn lane improvements and site distance regulations to help with congestion management.

- Rezoning/CUP amendment - Deal Road Subdivision, Threshold Church and Weddington Swim and Racquet.

  Visual effect from surrounding properties and roadways were protected with adding and maintaining buffers and conditions were taken into account for conditional zoning processes.

- Entry monuments, Amenity Center, and Signs - the Enclave, Atherton Amenity Center, and All Saints Anglican Church.

  The reviews ensured the plans were consistent with the Town's quality and aesthetic values.

- Final plats – The Falls, Atherton Estates, Vintage Creek, The Enclave, The Woods, Carringdon and Tuscan Ridge.

- Text amendments:

  The Board supported the Town's existing 600' cul-de-sac length requirement to help with connectivity and distribute traffic.

  Text amendments on political signs, maintenance bonds, and protest petitions were approved to keep the Town ordinances current with state statute regulations.

  The board recommended language on addressing and cluster mailboxes to streamline processes.

  Definitions and requirements for accessory structures and gross acreage of land were clarified.

  The board recommended new regulations on blasting that included notification of residents, and a small cell telecommunication ordinance was added that will regulate modern technology to protect aesthetics within the town.

- Other: The Town continues to maintain the medians on Providence Road to enhance rural look.

- The Planning Board heard a Presentation from Union Power and is considering the landscape plans be reviewed by utility agencies to better coordinate with the power company. They'll also review plant species planted near rights of way.

Town Council Retreat Topics

- Greenways/connectivity

  The board discussed greenways and has information to bring to the Town Council for comment.

- RCD – Lot Sizes

  The board continues to discuss lot sizes to ensure the goals and objectives of the land use plan are still being met with current development.

  Update – the Planning Board made a recommendation to Council to raise the minimum from 12,000 square feet to 15,000 square feet and only allow exceptions when the tract of land creates undue hardships.

- Downtown Overlay

  The board is requested to review the overlay district to ensure that the type, location, and scale of existing commercial and future commercial development in the Town is sufficient to protect property values and serve the residents. Development shall be limited to small-scale retail and service businesses, particularly specialty shops and restaurants. Open space preservation shall be included yet standards shall push for a cohesive design and site layout.

  The Town recently purchased property in the overlay district.

- LARTP Update

  The Town Council is in the process of updating the LARTP to ensure the goals and objectives for intersections and thoroughfares are being met and that Rights of way are being reserved.

Centralina Council of Governments

EXHIBIT G

Statement of Work

Town of Weddington Code Enforcement Program

This Statement of Work ("SOW"), dated as of the 1st day of July, 2017 (the "Effective Date"), is by and between CENTRALINA COUNCIL OF GOVERNMENTS, a North Carolina regional council of governments pursuant to Chapter 160A, Article 20, Part 2 of the General Statutes of North Carolina and having a principal place of business at 9815 David Taylor Drive, Suite 100, Charlotte, North Carolina 28262 ("CCOG"), and the Town of Weddington, a local government member of CCOG having a principal place of business at 1924 Weddington Rd., Weddington, NC 28104 ("Member"), pursuant to which CCOG will provide to Member planning and/or management services (the "Services"). CCOG and Member have simultaneously entered into a Services Agreement (the "Agreement"). The Agreement is incorporated into this SOW by this reference. In the event of any conflicting or additional terms between this SOW and the Agreement, the Agreement will govern, except with respect to price and scope of work or other items expressly permitted by the Agreement.

I. Introduction

This document outlines the services, which CCOG (or "we") shall perform under the contract to provide Code Enforcement Program services for the Town of Weddington.

II. Code Compliance Services

CCOG will perform the following activities:

1. Investigate substandard building, housing, zoning and nuisance complaints and notify owners of violations.
2. Prepare case files and take photographs of violations.
3. Posts and mails notices of violations and notifications of hearings.
4. Schedule, coordinate, and attend violation hearings.
5. Perform routine follow-up investigation to ensure compliance and notifies concerned parties of action(s) taken.
6. Advise property owner(s) on the appropriate actions necessary to bring property into compliance.
7. Coordinate condemnation activities with Town staff and Town attorney.
8. Prepare condemnation documents for Town Council review.
9. Attend Town Council meetings as requested to address code enforcement and/or condemnation questions from Council and/or the public.

III. Compensation

Centralina staff will perform the tasks identified in this SOW and as detailed herein for a sum of $7,815.

IV. Terms of Compensation

Notwithstanding any prior estimate or communication given, the Town of Weddington hereby agrees to pay the full contract costs outlined by CCOG in this Statement of Work attached as an exhibit to the Services contract. It is expressly agreed and understood that the total amount to be paid by the Town under this SOW shall not exceed $7,815 The **Code Enforcement Services** shall be billed in equal increments on a **quarterly** basis during the term of the contract period for the **total of $7,815** for said services.

Payment Schedule for Code Enforcement Services:

FY 2017-2018 ($7,815)

Payment 1: Due at execution of contract	$1,953.75
Payment 2: October 1, 2017	$1,953.75
Payment 3: January 1, 2018	$1,953.75
Payment 4: April 1, 2018	$1,953.75

If total of requested work approaches 90% of the full contract amount prior to the full term period of contract, CCOG will notify the Town's project manager prior to performing any services in excess of the contract amount. The local government may then choose to approve the additional services cost or reduce the scope of work as they may choose. The additional services if approved will be billed at a fixed rate per hour for the personnel performing the services.

V. Time of Performance

The Code Enforcement services will start on July 1, 2017 and will end on June 30, 2018.

[Signatures on following page.]

This Agreement has been executed by each Party's duly authorized representative as of the date below such Party's signature.

TOWN OF WEDDINGTON

By: _____

Name: Lisa Thompson

Title: Town Administrator

Date: _____

CENTRALINA COUNCIL OF GOVERNMENTS

By: Prosser

Name: Jim Prosser

Title: Executive Director

Date: 6-20-17

"This instrument has been pre-audited in the manner required by the North Carolina Local Government Finance Act."

_____ _____

Print Name Signature

"This instrument is approved as to form as required by CCOG Policy."

WEDDINGTON CODE ENFORCEMENT REPORT

June, 2017

1. **404 Cottonfield Cir., James & Shannon Cox**

    - 5/31/17—Legal action pending.

2. **4005 Ambassador Ct., Inez B. McRae Trust**
    - **"In Rem" repairs to secure and close this building were performed in 2015. Lien for cost of these repairs recorded with Union County Register of Deeds in amount of $7000.00.**
    - **5/31/17—Deterioration continues**

3. **Highway 84 & Twelve Mile Creek Rd.**

    - **4/30/17—No Change. Stumps and some debris still on property.**
    - **5/31/17—No Change.**

4. **"Illegal sign sweep".**

    - **6/30/17—No signs removed.**

5. **8/4/16----8119 Lake Providence Dr.---construction of residence has discontinued. Courtesy letter sent to property owner seeking on-site inspection and closing/securing building to prevent unauthorized entry.**
    - **Update: property is listed for sale at this time.**
    -
6. **8319 Lake Providence Dr.---property advertised as available for"venues"**
    - **No violations found or activity observed. Cased closed.**
    -
7. **8304 Foxbridge Dr.---accessory building without permit**
    - **Courtesy letter to owner informing him that permit is required from Town and Union county.**
    - **2/28/17--No response to courtesy letter; violation notice is next step.**
    - **3/31/17—Notice of Violation and Citation issued 3/24/17. Owner has contacted staff for required permits.**
    - **4/30/17—Still in process/permits?**
    - **5/31/17—No change. Permit?**
    - **Still no permit for large utility building. Citation to be issued.**

8. **3045 Rock Ridge Pass**
   - **2/28/17---Report of possible "event venue". Correspondence with owner informing them Zoning Regulations do not allow this; site inspection, no violation found, owner declares they have no intention of operating such a use. Will monitor for a few months.**
   - **6/30/17---No violation observed. Case closed.**

9. **Antioch Plantation—logged lots**
   - **2 lots have been logged/clear cut. No erosion or mud in streets. It appears clearing is for new construction.**

10. **2924 Michelle Dr.**
    - **Wood cutting/firewood operation – in operation prior to Weddington's Zoning Reg's.**
    - **5/31/17—Owner is downsizing this "pre-existing" wood business and cleaning up.**

11. **4716 Weddinton Matthews Rd.**
    - **Existing residence under remodel/expansion. New owner has permit, but needs to acquire permit for 2nd story expansion for Union County**
    - **6/30/17---Per owner, he will use this as his residence only. Will continue to monitor.**

TOWN OF WEDDINGTON
REVENUE & EXPENDITURE STATEMENT BY DEPARTMENT

FY 2016-2017

06/01/2017 TO 06/30/2017

		CURRENT PERIOD	YEAR-TO-DATE	BUDGETED	% BUDGET REM
REVENUE:					
10-3101-110	AD VALOREM TAX - CURRENT	241.58	1,016,025.07	1,010,000.00	-1
10-3102-110	AD VALOREM TAX - 1ST PRIOR	409.34	2,836.76	2,500.00	-13
10-3103-110	AD VALOREM TAX - NEXT 8	838.48	2,865.32	1,500.00	-91
10-3110-121	AD VALOREM TAX - MOTOR	7,962.43	79,198.15	85,000.00	7
10-3115-180	TAX INTEREST	223.97	3,381.50	2,250.00	-50
10-3231-220	LOCAL OPTION SALES TAX REV	30,223.65	271,883.10	311,250.00	13
10-3322-220	BEER & WINE TAX	46,728.11	46,728.11	45,000.00	-4
10-3324-220	UTILITY FRANCHISE TAX	124,516.59	459,898.01	450,000.00	-2
10-3340-400	ZONING & PERMIT FEES	4,495.00	42,838.00	34,850.00	-23
10-3350-400	SUBDIVISION FEES	4,125.00	44,180.00	43,300.00	-2
10-3830-891	MISCELLANEOUS REVENUES	7.00	36,457.24	36,000.00	-1
10-3831-491	INVESTMENT INCOME	666.07	6,071.53	6,000.00	-1
TOTAL REVENUE		220,437.22	2,012,362.79	2,027,650.00	1
AFTER TRANSFERS		220,437.22	2,012,362.79	2,027,650.00	
4110 GENERAL GOVERNMENT					
EXPENDITURE:					
10-4110-126	FIRE DEPT SUBSIDIES	59,309.17	711,710.04	717,710.00	1
10-4110-127	FIRE DEPARTMENT	0.00	65.00	10,000.00	99
10-4110-128	POLICE PROTECTION	0.00	257,001.00	258,620.00	1
10-4110-192	ATTORNEY FEES - GENERAL	1,586.69	56,263.90	95,000.00	41
10-4110-193	ATTORNEY FEES - LITIGATION	363.00	13,484.83	100,000.00	87
10-4110-195	ELECTION EXPENSE	0.00	0.00	3,500.00	100
10-4110-340	PUBLICATIONS	0.00	5,075.46	12,000.00	58
10-4110-341	WEDDINGTON FESTIVAL	0.00	-3,868.02	10,000.00	139
10-4110-342	HOLIDAY/TREE LIGHTING	0.00	4,265.38	6,500.00	34
10-4110-343	SPRING EVENT	0.00	0.00	750.00	100
10-4110-344	OTHER COMMUNITY EVENTS	619.08	1,548.67	500.00	-210
10-4110-495	COMMITTEE & OUTSIDE	0.00	0.00	1,500.00	100
TOTAL EXPENDITURE		61,877.94	1,045,546.26	1,216,080.00	14
BEFORE TRANSFERS		-61,877.94	-1,045,546.26	-1,216,080.00	
AFTER TRANSFERS		-61,877.94	-1,045,546.26	-1,216,080.00	
4120 ADMINISTRATIVE					
EXPENDITURE:					
10-4120-121	SALARIES - CLERK	1,722.00	53,659.81	53,150.00	-1
10-4120-123	SALARIES - TAX COLLECTOR	3,270.80	43,399.50	47,650.00	9
10-4120-124	SALARIES - FINANCE OFFICER	727.05	19,319.28	22,250.00	13
10-4120-125	SALARIES - MAYOR & TOWN	2,100.00	25,200.00	25,200.00	0
10-4120-181	FICA EXPENSE	598.17	10,830.02	12,800.00	15
10-4120-182	EMPLOYEE RETIREMENT	501.73	13,211.26	14,650.00	10

		CURRENT PERIOD	YEAR-TO-DATE	BUDGETED	% BUDGET REM
10-4120-183	EMPLOYEE INSURANCE	1,013.00	17,162.96	18,000.00	5
10-4120-184	EMPLOYEE LIFE INSURANCE	12.60	259.84	400.00	35
10-4120-185	EMPLOYEE S-T DISABILITY	12.00	192.00	300.00	36
10-4120-191	AUDIT FEES	0.00	8,300.00	8,500.00	2
10-4120-193	CONTRACT LABOR	5,940.00	33,270.97	41,000.00	19
10-4120-200	OFFICE SUPPLIES - ADMIN	211.71	7,597.71	13,000.00	42
10-4120-210	PLANNING CONFERENCE	0.00	512.16	4,000.00	87
10-4120-321	TELEPHONE - ADMIN	166.19	2,428.96	3,500.00	31
10-4120-325	POSTAGE - ADMIN	150.00	1,751.76	2,500.00	30
10-4120-331	UTILITIES - ADMIN	550.30	4,429.64	4,250.00	-4
10-4120-351	REPAIRS & MAINTENANCE -	0.00	27,318.00	30,500.00	10
10-4120-352	REPAIRS & MAINTENANCE -	3,428.02	56,574.96	65,000.00	13
10-4120-354	REPAIRS & MAINTENANCE -	3,207.50	50,445.35	63,520.00	21
10-4120-355	REPAIRS & MAINTENANCE -	485.00	1,410.00	1,000.00	-41
10-4120-356	REPAIRS & MAINTENANCE -	540.00	5,020.00	6,000.00	16
10-4120-370	ADVERTISING - ADMIN	68.47	717.12	1,000.00	28
10-4120-397	TAX LISTING & TAX	-7.09	-454.03	500.00	191
10-4120-400	ADMINISTRATIVE:TRAINING	0.00	1,851.50	3,000.00	38
10-4120-410	ADMINISTRATIVE:TRAVEL	482.69	5,217.63	6,000.00	13
10-4120-450	INSURANCE	0.00	13,533.28	15,500.00	13
10-4120-491	DUES & SUBSCRIPTIONS	450.00	18,460.92	18,000.00	-3
10-4120-498	GIFTS & AWARDS	91.81	1,102.81	3,000.00	63
10-4120-499	MISCELLANEOUS	456.90	7,082.88	8,000.00	11
10-4120-500	CAPITAL EXPENDITURES	0.00	593,250.00	593,250.00	0
TOTAL EXPENDITURE		26,178.85	1,023,056.29	1,085,420.00	6
BEFORE TRANSFERS		-26,178.85	-1,023,056.29	-1,085,420.00	
AFTER TRANSFERS		-26,178.85	-1,023,056.29	-1,085,420.00	

4130 PLANNING & ZONING

EXPENDITURE:

10-4130-121	SALARIES - ZONING	5,833.34	50,036.04	58,750.00	15
10-4130-122	SALARIES - ASST ZONING	0.00	4,019.18	5,250.00	23
10-4130-123	SALARIES - ADMINISTRATIVE	701.25	15,985.32	25,725.00	38
10-4130-124	SALARIES - PLANNING BOARD	425.00	4,850.00	5,200.00	7
10-4130-125	SALARIES - SIGN REMOVAL	222.74	2,923.48	4,000.00	27
10-4130-181	FICA EXPENSE - P&Z	547.34	5,938.14	8,025.00	26
10-4130-182	EMPLOYEE RETIREMENT - P&Z	894.84	9,330.41	13,500.00	31
10-4130-183	EMPLOYEE INSURANCE	1,013.00	14,206.00	16,000.00	11
10-4130-184	EMPLOYEE LIFE INSURANCE	19.60	192.64	300.00	36
10-4130-185	EMPLOYEE S-T DISABILITY	12.00	84.00	150.00	44
10-4130-193	CONSULTING	-1,565.25	14,014.23	20,000.00	30
10-4130-194	CONSULTING - COG	0.00	4,405.00	8,250.00	47
10-4130-200	OFFICE SUPPLIES - PLANNING	300.17	7,125.48	5,000.00	-43
10-4130-201	ZONING SPECIFIC OFFICE	0.00	0.00	2,500.00	100

		CURRENT PERIOD	YEAR-TO-DATE	BUDGETED	% BUDGET REM
10-4130-215	HISTORIC PRESERVATION	0.00	249.46	1,000.00	75
10-4130-220	INFRASTRUCTURE	0.00	0.00	89,500.00	100
10-4130-321	TELEPHONE - PLANNING &	166.18	2,429.08	3,500.00	31
10-4130-325	POSTAGE - PLANNING & ZONING	150.00	1,706.67	2,500.00	32
10-4130-331	UTILITIES - PLANNING & ZONING	550.29	4,474.89	4,250.00	-5
10-4130-370	ADVERTISING - PLANNING &	68.47	675.50	1,000.00	32
TOTAL EXPENDITURE		9,338.97	142,645.52	274,400.00	48
BEFORE TRANSFERS		-9,338.97	-142,645.52	-274,400.00	
AFTER TRANSFERS		-9,338.97	-142,645.52	-274,400.00	
GRAND TOTAL		123,041.46	-198,885.28	-548,250.00	

ASSETS

ASSETS		
10-1120-000	TRINITY CHECKING ACCOUNT	827,965.81
10-1120-001	TRINITY MONEY MARKET	1,114,730.11
10-1170-000	NC CASH MGMT TRUST	533,301.14
10-1211-001	A/R PROPERTY TAX	9,706.63
10-1212-001	A/R PROPERTY TAX - 1ST YEAR PRIOR	2,909.01
10-1212-002	A/R PROPERTY TAX - NEXT 8 PRIOR YRS	7,210.13
10-1214-000	PREPAID ASSETS	3,427.44
10-1232-000	SALES TAX RECEIVABLE	2,293.21
10-1610-001	FIXED ASSETS - LAND & BUILDINGS	2,346,268.11
10-1610-002	FIXED ASSETS - FURNITURE & FIXTURES	23,513.12
10-1610-003	FIXED ASSETS - EQUIPMENT	118,306.60
10-1610-004	FIXED ASSETS - INFRASTRUCTURE	26,851.01
	TOTAL ASSETS	5,016,482.32

LIABILITIES & EQUITY

LIABILITIES		
10-2120-000	BOND DEPOSIT PAYABLE	75,002.25
10-2620-000	DEFERRED REVENUE - DELQ TAXES	2,909.01
10-2625-000	DEFERRED REVENUE - CURR YR TAX	9,706.63
10-2630-000	DEFERRED REVENUE-NEXT 8	7,210.13
	TOTAL LIABILITIES	94,828.02
EQUITY		
10-2620-001	FUND BALANCE - UNASSIGNED	2,551,598.54
10-2620-003	FUND BALANCE-ASSIGNED	54,000.00
10-2620-004	FUND BALANCE-INVEST IN FIXED ASSETS	2,514,941.04
	CURRENT FUND BALANCE - YTD NET REV	-198,885.28
	TOTAL EQUITY	4,921,654.30
	TOTAL LIABILITIES & FUND EQUITY	5,016,482.32

TOWN OF
W E D D I N G T O N

MEMORANDUM

TO: Mayor and Town Council

FROM: Kim Woods, Tax Collector

DATE: **July 10, 2017**

SUBJECT: **Monthly Report –June 2017**

Transactions:	
Adjustments <5.00	$(2.37)
Penalty and Interest Payments	$(277.04)
Interest Charges	$132.90
Releases	$(17.64)
Taxes Collected:	
2008	$(138.31)
2009	$(200.63)
2010	$(62.32)
2011	$(92.67)
2013	$(344.55)
2015	$(409.34)
2016	$(240.65)
As of June 30, 2017; the following taxes remain Outstanding:	
2006	$54.35
2007	$83.43
2008	$808.16
2009	$598.83
2010	$575.29
2011	$100.56
2012	$946.39
2013	$1717.97
2014	$2325.15
2015	$2909.01
2016	$9706.63
Total Outstanding:	$19825.77

Union County Sheriff's Office

List of Events

Alarm Calls

For the Month of: June 2017

Date of Report

7/1/2017

9:00:33AM

	Incident #	Date/Time	Street	City	Subdivision	Prime Unit	
	Nature	Priority	Agcy	Zone	Business	Caller Name	Close Code
1	2017154993	6/1/2017 18:12:45	509 DEVONPORT DR	WED	WELN	W1	CAL
	ALARMS LAW	7	UCSO	T10		FRANKLIN, MATT	
	FRONT DOOR [06/01/17 18:13:23 RGENABE]						
	SEC CENTRAL - OP 7180 - 800-230-6975 [06/01/17 18:13:41 RGENABE]						
	ALC REQ -22 // OP 7041 [06/01/17 18:21:38 JBROWN]						
2	2017155426	6/2/2017 4:25:14	1112 LAFAYETTE PARK LN	WED	WILL	D314	CAL
	ALARMS LAW	7	UCSO	T10		LOWE, GERALD	
	PERIMETER BURG ALARM [06/02/17 04:25:59 AANGELONE]						
	LINE BUSY [06/02/17 04:26:05 AANGELONE]						
	AMERICAN BURG ALARM/PAULA/18005605271 [06/02/17 04:26:29 AANGELONE]						
	ALCO ATT ANOTHER NUMBER [06/02/17 04:27:00 AANGELONE]						
	ALARM COMP REQ -22 [06/02/17 04:32:27 LNAVARRO]						
3	2017155786	6/2/2017 12:03:40	5707 CHERRY HOLLOW LN	WED	WILA	W3	CAL
	ALARMS LAW	7	UCSO	T10		MASON, BRYAN	
	2ND GARAGE DOOR [06/02/17 12:04:10 CGRAHAM]						
	EXHAUSTED KH LIST // NO RESPONSE [06/02/17 12:04:32 CGRAHAM]						
	CPI // OP 3337 // CB 800 948 7133 [06/02/17 12:04:43 CGRAHAM]						
	ALC REQ -22 // OP 3337 [06/02/17 12:08:12 JBROWN]						
4	2017155983	6/2/2017 15:46:09	1008 SHIPPON LN	WED	STRT	W3	G
	ALARMS LAW	7	UCSO	T10		PALMER, GARY & PAM	
	BURG // GARAGE AND SIDE [06/02/17 15:46:38 JBROWN]						
	SEC CEN // OP 7095 // CB 18002306975 [06/02/17 15:47:19 JBROWN]						
	ALC ADV TWO YORKIES AND A PARROT ON PREMISE [06/02/17 15:47:41 JBROWN]						
	Contractors working on house. They were given the code for the garage. Neighbor verified the workers have been working on house for a couple days now. Animals were not at fault for setting alarm off. [06/02/17 16:06:51 Unit:W3]						
5	2017156309	6/2/2017 21:27:48	13651 PROVIDENCE RD	WED		W2	F
	ALARMS LAW	7	UCSO	T10	SUBWAY WEDDINGTON	SUBWAY WEDDINGTON	
	ZONE 3 BACK DOOR [06/02/17 21:28:08 MBALDWIN]						
	PROTECTION 1 / 877-305-2984 / OP#EKG [06/02/17 21:28:25 MBALDWIN]						
	UDTS: {W2} NO NEED TO CHECK STATUS [06/02/17 21:38:46 EBROWER]						
	No one appeared to be at the store, the store was closed. The doors appeared to be secure. False alarm. [06/02/17 21:39:56 Unit:W2]						
6	2017156805	6/3/2017 10:51:46	3007 TWIN LAKES DR	WED	LAKF	D314	F
	ALARMS LAW	7	UCSO	T10		MILFORD, DAVID	

Incident #	Date/Time	Street	City	Subdivision	Prime Unit	
Nature	Priority	Agcy	Zone	Business	Caller Name	Close Code

UPSTAIRS MOT DECT [06/03/17 10:52:23 CSCOTT]
MADE CONTACT WITH KH // RED DISPATCH [06/03/17 10:52:51 CSCOTT]
REQ** [06/03/17 10:52:57 CSCOTT]
VIVANT // CB 8773203858 // OP # 295 [06/03/17 10:53:15 CSCOTT]
Spoke with the homeowner through the alarm system and they are out of town. Walk the perimeter and check the residence, all doors and windows appear secure at this time. I informed the homeowner of same. [06/03/17 11:23:13 Unit:D314]

---

7 | 2017157445 | 6/3/2017 | 23:56:35 | 247 S PROVIDENCE RD | WED | | C324 | N
ALARMS LAW | 7 | UCSO | T10 | | | SHEPHARD, MARK |

INTERIOR MOTION [06/03/17 23:56:59 SCASHMAN]
NOT REACHED KH [06/03/17 23:57:13 SCASHMAN]
GATE ON DRIVEWAY THAT IS LOCKED // GATE KEY IN PLASTIC BAG ON LAST POST WITH LOCK [06/03/17 23:57:56 SCASHMAN]
HOUSE HAS BEEN BROKEN INTO 3 TIMES BEFORE [06/03/17 23:58:10 SCASHMAN]
BURGLER PROBABLY COMING IN VIA DIRT ROAD IN BACK OF PROPERTY THAT EXITS ONTO OLD MILL RD // MAY BE ON FOOT OR IN CAR [06/03/17 23:58:36 SCASHMAN]
SIMPLY SAFE // 6414 // 800-633-2677 [06/03/17 23:58:58 SCASHMAN]
ABOVE ARE NOTES PROVIDED TO AC BY HOMEOWNER [06/03/17 23:59:20 SCASHMAN]
UDTS: {C324} NO NEED TO CHECK STATUS [06/04/17 00:28:01 GSECREST]
All windows and doors appear to be secure. [06/04/17 00:28:24 Unit:C324]

---

8 | 2017158043 | 6/4/2017 | 16:05:27 | 3927 N TWELVE MILE CREEK RD | MAT | | W2 | F
ALARMS LAW | 7 | UCSO | T10 | WEDDINGTON ELEMENTARY SCHOOL | | |

FRIST WING HALLWAY MOT [06/04/17 16:06:13 CSCOTT]
KH: MCCRAY, JARROD 704 320 3537 // SPOKE TO KH AND HE ADVISED TO DISPATCH AND DO A DRIVE BY [06/04/17 16:07:16 CSCOTT]
IF HE IS NEEDED HE CAN RESPOND [06/04/17 16:07:23 CSCOTT]
SENTRY WATCH // 8006324961 // OP # 593 [06/04/17 16:07:45 CSCOTT]
The doors I was able to check appeared secure. There was an event going on at the ball field. False alarm. [06/04/17 16:37:35 Unit:W2]

---

9 | 2017158112 | 6/4/2017 | 17:53:06 | 1049 BROMLEY DR | WED | BROL | W2 | F
ALARMS LAW | 7 | UCSO | T10 | | | BOWER, STEVEN |

GARAGE ENTRY DOOR [06/04/17 17:53:40 CSCOTT]
UNABLE TO REACH ANY KHS [06/04/17 17:54:07 CSCOTT]
TIME WARNER // CB 8443996388 // OP # 1156 [06/04/17 17:54:24 CSCOTT]
No one appeared to be home. The doors and windows appeared to be secure. False alarm. [06/04/17 18:13:39 Unit:W2]

---

10 | 2017158814 | 6/5/2017 | 11:23:00 | 2026 WEDDINGTON LAKE DR | WED | LAKF | A313 | CNR
ALARMS LAW | 7 | UCSO | T10 | | | BORDNER, MICHELLE |

DINING ROOM DOOR [06/05/17 11:23:38 ACHILDERS]
ADT / OPER UOD / 877.238.7730 [06/05/17 11:24:23 ACHILDERS]
I walked around the house and checked all the doors and everything was secure. I observed no suspicious activity. I also heard no audible alarm. [06/05/17 11:42:41 Unit:A334]

---

11 | 2017158918 | 6/5/2017 | 13:21:32 | 101 NELSON RD | WED | WELN | A322 | F
ALARMS LAW | 7 | UCSO | T10 | | | CUPPOLA, NANCY |

Incident #	Date/Time	Street	City	Subdivision	Prime Unit	
Nature	Priority	Agcy	Zone	Business	Caller Name	Close Code

REAR DOOR MOTION [06/05/17 13:22:02 TJONES]
#GTL // ADT // 8772387730 [06/05/17 13:22:40 TJONES]
ON PREMISE THERE IS A EARNEST CUPPOLA // RESD NOTES ADV CALL POLICE IF THERE IS A MALE ON SITE THAT BRYAN MOORE [06/05/17 13:23:15 TJONES]
Made contact with ERNEST JAMES COPPOLA - who resides at this address. Mr. Coppola stated all was ok & the alarm was set off by accident. Mr. Coppola also stated that they contacted ADT to have the note regarding their Son; Bryan removed as he has not been around in roughly 10 years. No further - False alarm. [06/05/17 13:48:06 Unit:A322]

---

12 | 2017159356 | 6/5/2017 | 21:12:00 | 2026 WEDDINGTON LAKE DR | WED | LAKF | B334 | F
ALARMS LAW | 7 | UCSO | T10

ZONE 3 DINING ROOM DOOR [06/05/17 21:12:58 MGADAIRE]
ADT // 877-238-7730/ WILL ATT KH [06/05/17 21:13:26 MGADAIRE]
I checked all doors and they were secure with no signs of forced entry. All windows appeared to be secured. There was no audible alarm going off and no vehicles in the driveway. [06/05/17 21:29:54 Unit:B334]

---

13 | 2017159872 | 6/6/2017 | 10:53:54 | 187 CARI LN | WED | MAND | A322 | F
ALARMS LAW | 7 | UCSO | T10 | BENT, ELSIE

AUDIBLE BURG ALARM HALLWAY [06/06/17 10:54:39 MULLIGAN]
TWC//844-399-6388//OP 1120 [06/06/17 10:55:11 MULLIGAN]
AC CB ADV THEY HAVE BEEN UNABLE TO CONTACT ANY KH [06/06/17 11:01:44 TJONES]
Checked house and all appeared normal - appears nobody is home - False [06/06/17 11:07:41 Unit:A322]

---

14 | 2017162874 | 6/9/2017 | 7:33:34 | 117 EDEN HOLLOW LN | WED | FALL | A322 | N
ALARMS LAW | 7 | UCSO | T10 | BAUCOMAN, JASON

ENTRY EXIT MOTION [06/09/17 07:34:09 TJONES]
#7170 // SECC/ / 8006332677 [06/09/17 07:34:43 TJONES]
PER AC -22 [06/09/17 07:37:22 MULLIGAN]

---

15 | 2017163336 | 6/9/2017 | 16:07:11 | 2026 WEDDINGTON LAKE DR | WED | LAKF | W1 | CNR
ALARMS LAW | 7 | UCSO | T10 | BORDNER, MICHELLE

DINING ROOM DOOR [06/09/17 16:07:29 NHRBOLICH]
ATT KH / OP CORY / 8772857397 [06/09/17 16:07:44 NHRBOLICH]
Canceling response due to multiple false alarms in history with no keyholder response. [06/09/17 16:11:29 Unit:W1]

---

16 | 2017163485 | 6/9/2017 | 18:38:01 | 3117 LAKEHURST CRSG | WED | PREV | B334 | G
ALARMS LAW | 7 | UCSO | T10 | MCQUEEN, VICTORIA

FRONT OR GARAGE DOOR ALARM / BACK DOOR [06/09/17 18:38:29 ACHILDERS]
CPI OP 3370 / 800.948.7133 [06/09/17 18:39:00 ACHILDERS]
Stephen Leahy (OLN 32088352) stated he was a family friend of Yvette and Vittorio Mcqueen and was at the house to check on it and water the plants while they are out of town. Stephen said they did not tell him the alarm was set. I spoke to Yvette on the phone and she stated they are authorized to be there and she told them the password to reset the alarm. [06/09/17 18:55:47 Unit:B334]

---

17 | 2017166847 | 6/13/2017 | 8:31:32 | 402 TIMBER TOP CT | WED | LAKF | W3 | CAL
ALARMS LAW | 7 | UCSO | T10 | KANTIMAHANTHI, RICHARD

ZONE 2 KEYFOB PANIC [06/13/17 08:32:04 CGRAHAM]
SPOKE TO RICHARD COULDNT PROVIDE PASSCODE [06/13/17 08:33:13 CGRAHAM]
ATT KH [06/13/17 08:33:14 CGRAHAM]
SIMPLY SAFE // OP 7170 // CB 800 633 2677 [06/13/17 08:33:25 CGRAHAM]
UPDATE: RICHARD CB PROVIDED FALSE ALARM PROPER PASSCODE // OP 6131 [06/13/17 08:45:37 CGRAHAM]
-22 PER ALC // OP 6131 [06/13/17 08:45:47 CGRAHAM]

	Incident #	Date/Time	Street	City	Subdivision	Prime Unit		
	Nature	Priority	Agcy	Zone	Business	Caller Name	Close Code	
18	2017166991	6/13/2017 11:08:10		1030 BARON RD	WED	AERO	245	F
	ALARMS LAW	7	UCSO	T10		MERLE, SANDRA		

KITCHEN MOTION [06/13/17 11:08:41 CGRAHAM]
ATT KH [06/13/17 11:09:02 CGRAHAM]
ACM // OP 56 // CB 8005352478 [06/13/17 11:09:20 CGRAHAM]
ALARM MONITOR CENTER [06/13/17 11:09:29 CGRAHAM]
22 PER AC [06/13/17 11:11:57 MKGREENE]
Homeowner on scene advised transferring telephone service. [06/13/17 11:23:20 Unit:245]

19	2017167039	6/13/2017 12:13:49		6917 TREE HILL RD	WED	WELN	W3	CAL
	ALARMS LAW	7	UCSO	T10				

GARAGE DOOR [06/13/17 12:14:02 NHRBOLICH]
ATT KH/ OP 7173 / 8002306975 [06/13/17 12:14:15 NHRBOLICH]
22 PER AC [06/13/17 12:16:48 MKGREENE]

20	2017167952	6/14/2017 9:05:48		4287 MOURNING DOVE DR	WED	WEDO	W3	F
	ALARMS LAW	7	UCSO	T10		HOWSON, JULIE		

BACK BEDROOM DR [06/14/17 09:06:47 MULLIGAN]
CPI//800-948-7133//OP 3498 [06/14/17 09:07:27 MULLIGAN]
All windows and doors appeared secure. Everything was 10-4. Small dog door on back door could have triggered alarm, as their was a cat running around. [06/14/17 09:16:54 Unit:W3]

21	2017168208	6/14/2017 13:30:49		219 LARKFIELD DR	WED	WEDG	W3	CAL
	ALARMS LAW	7	UCSO	T10		LYNCH, KAREN		

BACK DOOR [06/14/17 13:31:13 JBROWN]
TIME WARNER // OP 1042 // CB 8443996388 [06/14/17 13:31:57 JBROWN]
ALC REQ -22 [06/14/17 13:32:06 JBROWN]

22	2017169406	6/15/2017 14:55:26		1 BRIGADOON LN	WED		A313	F
	ALARMS LAW	7	UCSO	T10		MCLAUGHLIN, DANIEL		

MASTER BEDROOM DOOR ALARM [06/15/17 14:55:54 TJONES]
STEVE // UNIVERSAL MONITORING // 8009555771 [06/15/17 14:56:36 TJONES]
Family member on scene advised accidental. [06/15/17 15:06:37 Unit:A313]

23	2017169944	6/16/2017 6:08:45		5163 PANHANDLE CIR	WED	WELI	C314	N
	ALARMS LAW	7	UCSO	T10		MCKORKLE, PATRICIA		

ZONE 2 FRONT DOOR AND GARAGE DOOR [06/16/17 06:09:20 LNAVARRO]
ALARM COMP SPOKE TO HUSB ATT TO GET IN TOUCH WITH WIFE THAT IS POSS AT HOME [06/16/17 06:10:19 LNAVARRO]
ADT// HP2// 18772387730 [06/16/17 06:10:42 LNAVARRO]
UDTS: {245} NO NEED TO CHECK STATUS [06/16/17 07:19:27 SWATTS]
daughter Blaire Mccorkle dob 04-13-84, 3223 circle end dr, charlotte, house sitting for parents accidentially set off alarm [06/16/17 07:22:47 Unit:242]
Note: BlaireMcCorkle is hearing impaired. [06/16/17 07:24:38 Unit:245]

24	2017170148	6/16/2017 10:56:52		305 FIR PLACE CT	WED	LAKF	W3	CAL
	ALARMS LAW	7	UCSO	T10		PALMER, JAMES AND KATIE		

GARAGE DOOR, FOYER MOTION, BREAKFAST MOTION [06/16/17 10:57:33 CGRAHAM]
ATT KH [06/16/17 10:57:54 CGRAHAM]
SEC CENT // OP 7032 // CB 8002865699 [06/16/17 10:58:10 CGRAHAM]
-22 PER ALC ADVFALSE ALARM // OP 7032 [06/16/17 10:59:52 CGRAHAM]

	Incident #	Date/Time	Street	City	Subdivision	Prime Unit		
	Nature	Priority	Agcy	Zone	Business	Caller Name	Close Code	
25	2017171142	6/17/2017 9:36:30		1104 BROMLEY DR	WED	BROL	C334	F
	ALARMS LAW	7	UCSO	T10		MC, MICHELE		

MOTION DETECTOR [06/17/17 09:37:10 CGRAHAM]
ATT KH [06/17/17 09:37:40 CGRAHAM]
MONITOR WEST // OP 965 // CB 8004321429 [06/17/17 09:38:10 CGRAHAM]
***WESTMINISTER SEC [06/17/17 09:38:32 CGRAHAM]
ADDT ALARMS // RIGHT SALES OFFICE AND BASEMENT DOOR [06/17/17 09:53:07 MRHODEN]
OP#967 [06/17/17 09:53:12 MRHODEN]
Sales reps were inside the model home, they advised that the alarm was cut off at 0945. Everything is ok. [06/17/17 10:24:37 Unit:C334]

26	2017171170	6/17/2017 10:05:39		1112 LAFAYETTE PARK LN	WED	WILL	C314	F
	ALARMS LAW	7	UCSO	T10				

frnt garage [06/17/17 10:06:01 NHRBOLICH]
ATT KH NO ANSWER / OP 1617 / 8009555771 [06/17/17 10:06:16 NHRBOLICH]
Spoke with the homeowner, it was set off when they raised the door to let a neighbor in. Stated everything was ok,,, 10-8. [06/17/17 10:16:03 Unit:C314]

27	2017171791	6/17/2017 23:40:43		4076 ANCESTRY CIR	WED	WEDH	D312	F
	ALARMS LAW	7	UCSO	T10		TAYLOR, ROBERT		

FOYER MOTION [06/17/17 23:41:24 SCASHMAN]
ATT KH [06/17/17 23:41:35 SCASHMAN]
AMC // 61 // 800-535-2478 [06/17/17 23:42:05 SCASHMAN]
residence appeared to be secure [06/18/17 00:16:22 Unit:D312]

28	2017172076	6/18/2017 9:23:12		950 EAGLE RD	WED	AERO	M1	CAL
	ALARMS LAW	7	UCSO	T10		MCLOUD, CAROL AND WILL		

DOWNSTAIRS MOTION [06/18/17 09:23:42 CGRAHAM]
ADTL GARAGE DOOR ALARM [06/18/17 09:24:07 CGRAHAM]
ATT KH [06/18/17 09:24:10 CGRAHAM]
CPI // OP 2973 // CB 8009487133 [06/18/17 09:24:32 CGRAHAM]
NOTED ON PREMISE THAT HOMEOWNS ARE CURRENTLY OUT OF TOWN [06/18/17 09:24:45 CGRAHAM]
CANCEL PER AC OP 2973 [06/18/17 09:26:14 KMICHAELS]

29	2017172079	6/18/2017 9:28:45		8018 WICKLOW HALL DR	WED	HIGH	M1	CAL
	ALARMS LAW	7	UCSO	T10		EASON, MIKE		

ZONE 4 KITCHEN DOOR [06/18/17 09:29:22 CGRAHAM]
ATT KH [06/18/17 09:29:40 CGRAHAM]
MONI SEC / OP JOSHUA // CB 8004191730 [06/18/17 09:29:55 CGRAHAM]
REF # 1187330251 [06/18/17 09:30:16 CGRAHAM]
CANCEL PER AC OP 89775 [06/18/17 09:50:28 KMICHAELS]

30	2017172501	6/18/2017 19:21:06		4076 ANCESTRY CIR	WED	WEDH	C321	N
	ALARMS LAW	7	UCSO	T10		TAYLOR, ROBERT		

FOYER MOTION [06/18/17 19:21:40 SCASHMAN]
ATT KH // ADVISED LE MAY REQUIRE KH RESPONSE DUE TO NUMBER OF ACTIVATIONS [06/18/17 19:22:03 SCASHMAN]
AMC // 65 // 800-535-2478 [06/18/17 19:22:55 SCASHMAN]
Checked all windows and doors all appears secure [06/18/17 19:40:30 Unit:C321]

	Incident #	Date/Time	Street	City	Subdivision	Prime Unit	
	Nature	Priority	Agcy	Zone	Business	Caller Name	Close Code
31	2017172958	6/19/2017 7:38:51		726 LINGFIELD LN	WED	DEVO	242 CNR
	ALARMS LAW	7	UCSO	T10		UGWUOKE, NIKKI	

GARAGE DR [06/19/17 07:39:24 MULLIGAN]
CPI//800-948-7133//OP 3102 [06/19/17 07:40:08 MULLIGAN]
AC CB REQ -22 [06/19/17 07:41:58 TJONES]

32	2017173015	6/19/2017 8:43:10		2100 CLIMBING ROSE LN	WED	ROSE	B314 CAL
	ALARMS LAW	7	UCSO	T10		KEENER, BRANDON	

GARAGE/CARPORT DR [06/19/17 08:44:35 MULLIGAN]
PER AC, -22 [06/19/17 08:44:40 MULLIGAN]
ADT//877-238-7730//OP WDU [06/19/17 08:45:40 MULLIGAN]
AC CB REQ -22 [06/19/17 08:49:52 TJONES]

33	2017173782	6/19/2017 23:53:24		4532 GLEN OAKS DR	WED	PROW	A313 CAL
	ALARMS LAW	7	UCSO	T10		POPESCU, DORIAN	

BURG ZONE 000 [06/19/17 23:53:53 AANGELONE]
NO RESPONSE FROM KH [06/19/17 23:54:02 AANGELONE]
704-705-3210 ALT PHONE [06/19/17 23:54:43 AANGELONE]
SIMPLY SAFE/18006332677/7363 [06/19/17 23:54:58 AANGELONE]
ALC UPDATE // FALSE ALARM CALLED IN BY CHRISTINA GAVE PROPER PASSCODE // ALC REQ -22 // OP 7363 [06/19/17 23:57:58 JBROWN]

34	2017173901	6/20/2017 5:00:38		4901 WEDDINGTON RD	WED		B314 F
	ALARMS LAW	7	UCSO	T10 WEDDINGTON HIGH SCHOOL			

DESK VEIW B147// MAIN OFFICE 134// FOOD COURT 101 AND 102 [06/20/17 05:01:40 LNAVARRO]
KH MICHAEL HART ETA 15 MINS BLK KIA OPT [06/20/17 05:02:05 LNAVARRO]
SENTRY WATCH// OP 551//8006324961 [06/20/17 05:02:33 LNAVARRO]
UDTS: {B314} NO NEED TO CHECK STATUS [06/20/17 05:19:07 MGADAIRE]
The building was checked with the keyholder and the staff set if off [06/20/17 05:29:39 Unit:B314]
Cleaning lady was inside school [06/20/17 05:30:22 Unit:B321]

35	2017174211	6/20/2017 11:04:50		7600 POLYANTHA ROSE CIR	WED	ROSE	B321 CAL
	ALARMS LAW	7	UCSO	T10		LAWRENCE, MARTIN	

GARAGE DOOR ALARM [06/20/17 11:05:19 TJONES]
#4398 // CPI // 8009487133 [06/20/17 11:05:53 TJONES]
PER AC -22 [06/20/17 11:09:35 MULLIGAN]

36	2017175680	6/21/2017 19:25:06		2072 KINGS MANOR DR	WED	HIGH	W2 F
	ALARMS LAW	7	UCSO	T10		SMITH, RANDY	

FOYER MOTION [06/21/17 19:25:25 MBALDWIN]
ADT / 888-294-6736 / OP#EXH [06/21/17 19:25:54 MBALDWIN]
No one appeared to be home. The home appeared to be secure, I was not able to check the rear due to a dog in the back yard. False alarm. [06/21/17 19:46:41 Unit:W2]

37	2017176599	6/22/2017 17:18:02		4362 MOURNING DOVE DR	WED	WEDO	D334 CAL
	ALARMS LAW	7	UCSO	T10		HARRINGTON, CRAIG	

front/garage door [06/22/17 17:18:24 MRHODEN]
UNI // 8009555771 OP#TONYA [06/22/17 17:19:28 MRHODEN]
KH ADV IS OUT OF TOWN [06/22/17 17:19:51 MRHODEN]
CANCEL PER AC OP TONYA [06/22/17 17:24:20 KMICHAELS]

	Incident #	Date/Time	Street	City	Subdivision	Prime Unit	
	Nature	Priority	Agcy	Zone	Business	Caller Name	Close Code

38 2017176636 6/22/2017 18:19:24 6113 HUNTER LN WED WEDW D324 F
ALARMS LAW 7 UCSO T10 SESSA, KATHERINE

FAMILY ROOM MOTION [06/22/17 18:19:43 NHRBOLICH]
ATT KH / OP 2664 / 8009487133 [06/22/17 18:19:57 NHRBOLICH]
BACK MOTION ADTIONAL [06/22/17 18:27:53 NHRBOLICH]
Checked the house. All windows and doors secure. Dog running loose inside. Neighbor called the KH while I was there. The dog should have been put in the laundry room to prevent motion activations. [06/22/17 18:40:42 Unit:D324]

39 2017177010 6/23/2017 4:22:31 3142 FOXMEADE DR WED PROW B334 F
ALARMS LAW 7 UCSO T10 GILMER, CARALINE

FRONT GLASS BREAK [06/23/17 04:24:16 SCASHMAN]
AC SPOKE WITH HOMEOWNER AND SHE WOULD LIKE LE [06/23/17 04:24:54 SCASHMAN]
HOMEOWNER AT HOME [06/23/17 04:25:07 SCASHMAN]
SEC CEN // 7369 // 800-230-6975 [06/23/17 04:25:28 SCASHMAN]
Dep. Eason took call [06/23/17 04:27:15 Unit:B314]
UDTS: {B334} NO NEED TO CHECK STATUS [06/23/17 04:46:25 GSECREST]
She said she heard what sounded like something hit the front door. She said a few seconds later the alarm started going off. The front door appeared normal and nothing suspicious observed. I also checked around the home and there were no signs of any tampering. [06/23/17 04:49:56 Unit:B334]

40 2017177203 6/23/2017 9:23:41 2041 FITZHUGH LN WED STRA B314 N
ALARMS LAW 7 UCSO T10 HIGGINS, DAVID

FRONT DOOR / FOYER [06/23/17 09:24:30 CSCOTT]
ATMP KH NEXT [06/23/17 09:24:48 CSCOTT]
ALARM MONT // CB 8005352478 // OP # 11 [06/23/17 09:25:02 CSCOTT]
Dep Hunt took call [06/23/17 09:28:03 Unit:B314]
PER AC -22 [06/23/17 09:36:41 MULLIGAN]
All windows and doors appeared to be secure. No sign of attempted forced entry. [06/23/17 09:41:49 Unit:W3]

41 2017177223 6/23/2017 9:49:53 2041 FITZHUGH LN WED STRA W3 G
ALARMS LAW 7 UCSO T10 HIGGINS, DAVID

FRONT DR [06/23/17 09:50:22 MULLIGAN]
FOYER/DEN MTN [06/23/17 09:50:28 MULLIGAN]
ALARM MON//800-535-2478//OP 43 [06/23/17 09:50:59 MULLIGAN]
{W3} GOLD HONDA CIVIC ZYY6983 NC [06/23/17 09:51:24 ACOPELAND]
PER AC -22 [06/23/17 09:52:37 MULLIGAN]
UDTS: {W3} NO NEED TO CHECK STATUS [06/23/17 09:56:27 ACOPELAND]
Cleaning lady set alarm off, David arrived on scene and verified everything was 10-4. [06/23/17 09:58:21 Unit:W3]
David`s phone is 704-533-2342. [06/23/17 09:59:08 Unit:W3]

42 2017177274 6/23/2017 10:51:40 5029 DOCKSIDE CT WED LAKF W3 CAL
ALARMS LAW 7 UCSO T10 STARR, GABRIEL

FRONT DR [06/23/17 10:52:28 MULLIGAN]
CPI//800-948-7133//OP 2973 [06/23/17 10:52:58 MULLIGAN]
PER AC -22 [06/23/17 10:53:06 MULLIGAN]

43 2017177368 6/23/2017 12:32:51 7021 WILLOW TRACE LN WED HIGH W1 CAL
ALARMS LAW 7 UCSO T10 CHAMPANE, PHILIP

	Incident #	Date/Time	Street	City	Subdivision	Prime Unit	
	Nature	Priority	Agcy	Zone	Business	Caller Name	Close Code

ZONE 6 BREAKFAST ROOM MOTION// [06/23/17 12:33:31 RGENABE]
CUSTOM SEC - OP CAROL - 704-375-4365 [06/23/17 12:34:21 RGENABE]
AC CB REQ -22 [06/23/17 12:36:51 TJONES]

44	2017177505	6/23/2017	15:07:36	5903 DEAL RD	WED		W1	F
	ALARMS LAW	7	UCSO	T10 WEDDINGTON MIDDLE SCHOOL				

CAFETERIA MTN [06/23/17 15:08:04 MULLIGAN]
KH, JARETT MCCRAY ADV AC TO DISPATCH PD [06/23/17 15:08:33 MULLIGAN]
SENTRY WATCH//800-632-4961//OP 593 [06/23/17 15:08:56 MULLIGAN]
UDTS: {W1} NO NEED TO CHECK STATUS [06/23/17 15:14:39 ACOPELAND]
No keyholder response. All appears secure. [06/23/17 15:19:48 Unit:W1]

45	2017178659	6/24/2017	17:12:01	187 CARI LN	WED	MAND	W1	F
	ALARMS LAW	7	UCSO	T10		DENT, LC		

DECK AND OFC DRS [06/24/17 17:12:45 MULLIGAN]
TWC//844-399-6388//OP 1025 [06/24/17 17:13:16 MULLIGAN]
NO KH RESPONDING [06/24/17 17:18:21 MULLIGAN]
All appears secure. No keyholder response. [06/24/17 17:25:46 Unit:W1]

46	2017180120	6/26/2017	7:11:29	212 STEEPLE CHASE CIR	WED	STEP	D334	CAL
	ALARMS LAW	7	UCSO	T10		CARROLL, JEFFERY		

STORAGE AND OUTSIDE GARAGE DOOR [06/26/17 07:11:51 CGRAHAM]
ATT KH [06/26/17 07:12:11 CGRAHAM]
CPI // OP 3535 // CB 8009487133 [06/26/17 07:12:22 CGRAHAM]
CANCEL PER AC OP 3535 [06/26/17 07:14:59 KMICHAELS]

47	2017180163	6/26/2017	7:59:13	1211 HADLEY PARK LN	WED	HADL	D334	F
	ALARMS LAW	7	UCSO	T10		MRKOBRAD, DANNY		

kitchen glass break [06/26/17 07:59:42 MRHODEN]
AMC 8005352478 OP#42 [06/26/17 08:00:10 MRHODEN]
All was 10-4. Caller dropped a pan and it set the alarm off. [06/26/17 08:09:35 Unit:D334]

48	2017182250	6/28/2017	7:25:44	6045 OXFORDSHIRE RD	WED	STRT	B334	CAL
	ALARMS LAW	7	UCSO	T10		KVITKO, MICHAEL		

EXT BACK GARAGE DR [06/28/17 07:26:20 MULLIGAN]
CPI//800-948-7133//OP 2973 [06/28/17 07:26:58 MULLIGAN]
PER AC -22 [06/28/17 07:29:29 MULLIGAN]

49	2017182590	6/28/2017	13:47:29	1142 CAROLE CT	WED		WC1	CAL
	ALARMS LAW	7	UCSO	T10		HOWISON, KRISTI		

FRONT GARAGE DR [06/28/17 13:48:02 MULLIGAN]
CPI//800-948-7133//OP 3535 [06/28/17 13:48:37 MULLIGAN]
PER ALC -22 // HOWISON GAVE PROPER PASSCODE // OP # 3535 [06/28/17 13:50:11 CSCOTT]

50	2017182851	6/28/2017	17:15:42	7128 COBBLECREEK DR	WED	COBB	W1	F
	ALARMS LAW	7	UCSO	T10		GODWIN, HERBERT		

PORCH DOOR [06/28/17 17:16:01 CSCOTT]
LEFT MESSAGES FOR KH [06/28/17 17:16:26 CSCOTT]
ADT SEC // CB 8772387730 // OP TIM [06/28/17 17:16:39 CSCOTT]
Homeowner was not aware he set the alarm off. False alarm. [06/28/17 17:33:33 Unit:W1]

	Incident #	Date/Time	Street	City	Subdivision	Prime Unit		
	Nature	Priority	Agcy	Zone	Business	Caller Name	Close Code	
51	2017183978	6/29/2017 16:13:39		1600 COX RD	WED		W1	F
	ALARMS LAW	7	UCSO	T10		WILLIAMSON, HEIDI		

This is a reopened incident. [06/29/2017 16:15:16 TJONES]
BURG ALARM [06/29/17 16:14:21 TJONES]
#141 // GUARDIAN PROTECTION // 8558978838 [06/29/17 16:15:04 TJONES]
All appears secure. No keyholder response. [06/29/17 16:22:32 Unit:W1]

52	2017184808	6/30/2017 11:56:40		3891 MOURNING DOVE DR	WED	WEDO	D324	F
	ALARMS LAW	7	UCSO	T10			KARIBIAN, JACK	

EXTERIOR GARAGE DOOR [06/30/17 11:57:40 CGRAHAM]
ATT KH [06/30/17 11:58:05 CGRAHAM]
PROT 1 // OP DDR // CB 8002970543 [06/30/17 11:58:20 CGRAHAM]
-22 PER ALC // PASSCODE VER FALSE ALARM / OP GMKZ [06/30/17 12:06:00 CGRAHAM]
Tiny Kiker at 3903 was at the house putting away trash cans and the KH didn`t tell him about the alarm. Request to -22 as I was arriving. [06/30/17 12:08:16 Unit:D324]

Total Number of Calls for Month: **52**

Weddington

6/2017

UCR Code	Description	Date of Report	Incident ID	
13B				
13B	ASSAULT AND BATTERY	6/9/17	201705333	
13B	SIMPLE ASSAULT	6/17/17	201705592	
13B	ASSAULT ON FEMALE	6/21/17	201705689	
13B	SIMPLE ASSAULT	6/21/17	201705713	
13B	ASSAULT ON CHILD UNDER 12	6/30/17	201705991	
			Total:	**5**
23F				
23F	BEL / THEFT FROM MOTOR VEHICLE	6/14/17	201705461	
23F	BEL / THEFT FROM MOTOR VEHICLE	6/26/17	201705846	
			Total:	**2**
23H				
23H	LARCENY-FELONY	6/9/17	201705304	
23H	LARCENY-MISDEMEANOR	6/14/17	201705479	
23H	LARCENY-MISDEMEANOR	6/16/17	201705537	
23H	LARCENY-MISDEMEANOR	6/29/17	201705939	
			Total:	**4**
240				
240	MOTOR VEHICLE THEFT	6/13/17	201705453	
			Total:	**1**
26A				
26A	IDENTITY THEFT	6/9/17	201705331	
26A	IDENTITY THEFT	6/12/17	201705403	
			Total:	**2**
290				
290	INJURY TO REAL PROPERTY	6/20/17	201705665	
290	INJURY TO REAL PROPERTY	6/29/17	201705966	
			Total:	**2**
35A				
35A	POSSESS METHAMPHETAMINE	6/12/17	201705407	
35A	SIMPLE POSSESS SCH VI CS (M)	6/19/17	201705637	
			Total:	**2**
90Z				
90Z	HARASSING PHONE CALL	6/5/17	201705163	
90Z	HARASSING PHONE CALL	6/25/17	201705823	
			Total:	**2**
999				
999	INVOLUNTARY COMMITMENT-NON CRIMINAL DE	6/2/17	201705070	
999	INVESTIGATION	6/5/17	201705155	
999	MISSING PERSON	6/6/17	201705227	

Weddington

6/2017

UCR Code	Description	Date of Report	Incident ID	
999	ANIMAL CALL BITE	6/11/17	201705364	
999	ACCIDENT NO VISIBLE INJURY	6/13/17	201705424	
999	ACCIDENT NO VISIBLE INJURY	6/13/17	201705431	
999	ACCIDENT NO VISIBLE INJURY	6/14/17	201705482	
999	ACCIDENT NO VISIBLE INJURY	6/15/17	201705521	
999	ACCIDENT NO VISIBLE INJURY	6/21/17	201705704	
999	BARKING DOGS	6/28/17	201705907	
999	DSS INVESTIGATION	6/29/17	201705972	
			Total:	**11**

Monthly Crime Total **31**

Union County Sheriff's Office

Events By Nature

For the Month of: June 2017

Date of Report

7/1/2017
9:00:37AM

Event Type	Total
911 HANG UP	41
911 MISDIAL	6
911 TEST CALL	1
ABANDONED VEHICLE	5
ABUSE ABANDON NEGLECT LAW	1
ACCIDENT EMD	2
ACCIDENT HITRUN PD LAW	3
ACCIDENT PD COUNTY NO EMD	19
ALARMS LAW	52
ANIMAL BITE FOLLOW UP	1
ANIMAL BITE REPORT LAW	1
ANIMAL COMP SERVICE CALL LAW	5
ASSAULT OR SEX ASLT	1
ASSIST DSS ONSITE OR IN OFFICE	1
ASSIST EMS OR FIRE	3
ASSIST OTHER AGENCY LAW	2
ATTEMPT TO LOCATE	1
BARKING DOG	1
BOLO	23
BURGLARY HOME OTHER NONBUSNESS	1
BURGLARY VEHICLE	2
BUSINESS CHECK	22
CALL BY PHONE	11
CARDIAC RESPIRTY ARREST EMD	1
DELIVER MESSAGE	1
DISTURBANCE OR NUISANCE	2
DOMESTIC DISTURBANCE	3
ESCORT	2

Event Type	Total
FIGHT WITH WEAPONS	1
FOLLOW UP INVESTIGATION	6
FOOT PATROL	2
FRAUD DECEPTION FORGERY	3
HARASSMENT STALKING THREATS	3
IMPROPERLY PARKED VEHICLE	2
INVESTIGATION	2
JURISDICTION CONFIRMATION LAW	23
JUVENILE COMPLAINT	1
LARCENY THEFT	3
LIVE STOCK ON HIGHWAY	1
MEET REQUEST NO REFERENCE GIVN	3
MISSING PERSON	1
MOTORIST ASSIST	8
NOISE COMPLAINT	2
PREVENTATIVE PATROL	458
PROP DAMAGE VANDALISM MISCHIEF	4
RADAR PATROL INCLUDING TRAINIG	28
REFERAL OR INFORMATION CALL	1
REPOSESSION OF PROPERTY	3
RESIDENTIAL CHECK	3
SERVE CIVIL PAPER	1
SERVE EVICTION NOTICE	1
SERVE WARRANT	1
STRUCTURE FIRE EFD	3
SUSPICIOUS PERSON	4
SUSPICIOUS VEHICLE	11
THEFT OF VEHICLE OR PARTS	1
TRAFFIC HAZARD	1
TRAFFIC STOP	52
TRAFFIC VIOLATION COMPLAINT	3
TRESPASSING UNWANTED SUBJ	2

Event Type	Total
UNKNOWN LAW 3RD PARTY	**1**
UNLOCK REQUEST	**1**
WELL BEING CHECK	**1**

Total Calls for Month: ***855***